MC405C-3

Specifications

Capacity	Maximum	3.83 t x 2.7m
Working radius	Maximum	16.0m x 210kg
Lifting height	Maximum	16.8m x 1130kg (20.7m x 520kg with Fly-Jib)
Dimensions	MC405C-3	4980mm x 1380mm x 1980mm
Weight	MC405CRM-3 MC405CRME-3	5600kg 5750kg
Hook speed	Maximum	18m / min (4 falls, 4th layer)
Single line speed	Maximum	72m / min. (4th layer)
Hoist rope	Type	IWRC 6 x WS (26) Ø 8mm x 92m
Telescopic system	Boom length Telescoping speed Boom type	4.735m - 16.475m 11.7m / 41.3 sec Fully automatic 5 section pentagonal telescopic boom
Boom hoist system	Hoist angle / speed	0º - 80º / 17 sec.
Slew system	Slew angle / speed	360º continuous / 2.5 rpm
Outrigger system	Type Maximum outriggers	Extended Hydraulic cylinder direct acting Setting up Hydraulic cylinder direct acting (Length) 6076mm x (Front) 5441mm x (Rear) 5829mm
Traction system	Drive Travel speed Gradability Ground length x width Ground pressure	Hydraulic motor driven, stepless speed changer 0 - 2.9 km/h 20º 2100mm x 320mm 0.50 kgf / cm² (0.52 kgf / cm² CRME)
Engine	Model Type Rated output Starting method Fuel tank capacity	YANMAR 3TNV88F-EPMB 3 cylinder, water cooled diesel 17,5 kW / 2400 rpm Electric Diesel / 60L
Electric motor (Optional)	Type Spec.	Fully enclosed fan cooled motor 7.5 kW, 3-phase, 380V
Safe load indicator	Made specifically for Maeda Mini Cranes with a fully programmable working envelope	
Standard equipment	Overwind protection, hydraulic safety valves, level, tilt alarm, EMO switch, travel lock lever, crane/outrigger interlock system, moment limiter, working status lamp, hour-meter, 4-fall / 2-fall hook block, black rubber tracks, digital feedback cable remote control, data logger.	
Optional equipment	White Rubber Tracks Single Fall Hook Protection Roll Bar 850kg / 1500kg Searcher Hook Engine Heater & Hydraulic Heater Fly-Jib Slew restrictor Radio remote control Large single fall hook (as for LC models) Spark arrestor Plastic machine cover	

Electric Motor (Optional)

Searcher Hook (Optional)

www.kranlyft.com

Mini Crane

MC405C-3

- 3.83t x 2.7m Max Capacity
- 16.8m Max Lifting Height
- 16m x 210kg Max Working Radius

www.kranlyft.com

The MC405-3 is a very powerful Mini Crane with an outstanding 3.83 tons lifting capacity. This versatile model has a unique Pick and Carry feature of up to 500kg. The optional fly jib increases the already impressive working range even further. It also features an option of a class-leading Searcher Hook with 1500kg capacity.

The Yanmar diesel engine meets requirements for the new gas emission standards of EU Stage V which is valid from 2019.

The superior quality and engineering of the Maeda product line give longevity of use and a higher return on rental investments are enjoyed by end-users across the board.

- 3.83t Max Capacity
- 16.8m Max Lifting Height
- 500kg Pick & Carry Duty
- 2 Year Warranty
- EU Stage V Compliant Engine
- Working Limit Settings
- Data Logger
- Tilt Alarm
- Digital Feedback Remote Control
- Centralized Controls
- Energy Saving System
- Sheaves Protected Inside Boom
- Variable (Hi/Lo) Travel Speeds
- Crane/Outrigger Interlock System
- Programmable Moment Limiter
- Powerful Two Speed Winch with Hydraulic Disc Brake
- 4/2 Fall Hook Block
- Optional Electric Motor
- Optional Single Fall Hook
- Optional 850kg / 1500kg Searcher Hook

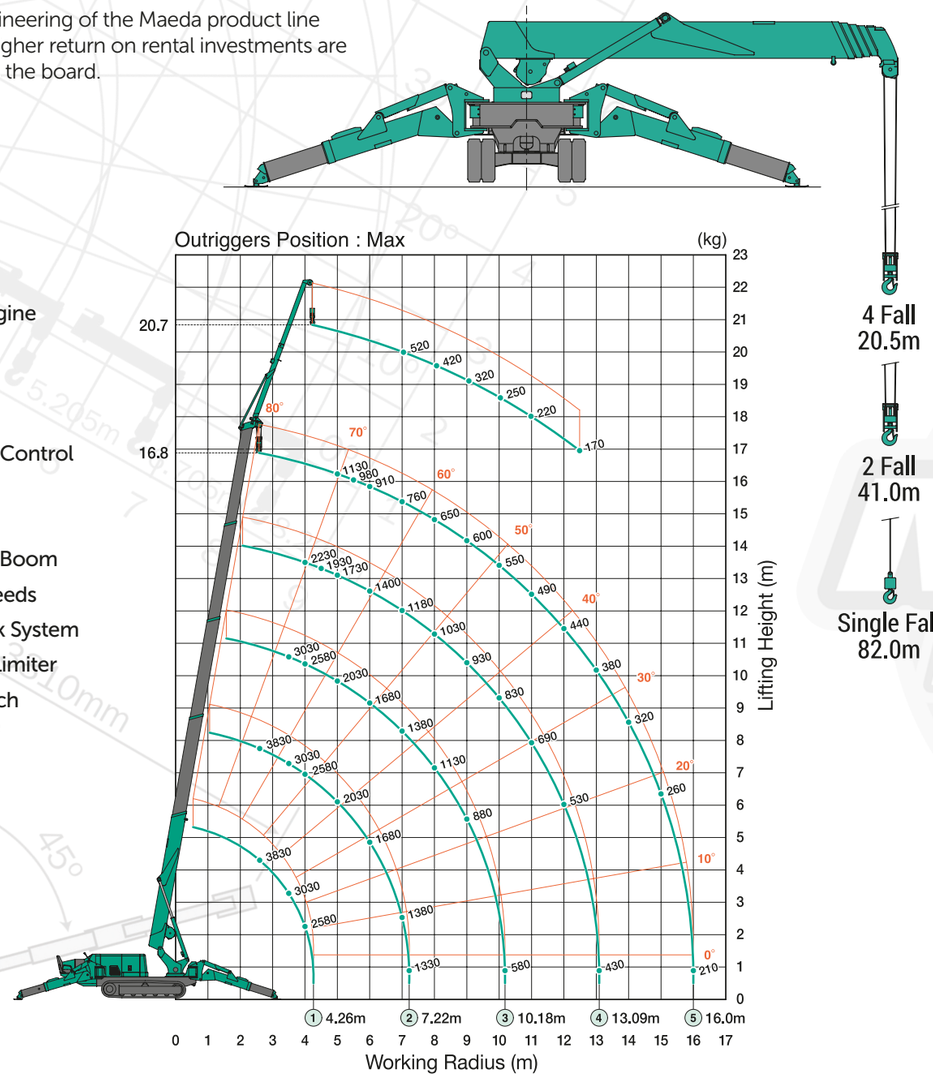

- This working range chart shows total rated load including boom deflection.

Outrigger Footprints

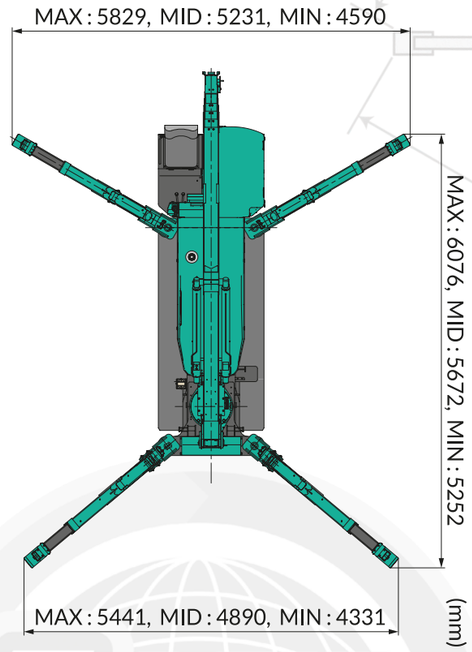

- Diagram shows outriggers at maximum position.

Total rated load Outriggers at Maximum position

4.735m/7.695m boom		10.655m boom		13.565m boom		16.475m boom	
Working radius (m)	Total rated load (kg)	Working radius (m)	Total rated load (kg)	Working radius (m)	Total rated load (kg)	Working radius (m)	Total rated load (kg)
< 2.7	3830	3.5	3030	4	2230	5	1130
3.5	3030	4	2580	4.5	1930	5.5	980
4	2580	5	2030	5	1730	6	910
5	2030	6	1680	6	1400	7	760
6	1680	7	1380	7	1180	8	650
7	1380	8	1130	8	1030	9	600
7.25	1330	9	880	9	930	10	550
		10.2	580	10	830	11	490
				11	690	12	440
				12	530	13	380
				13.1	430	14	320
						15	260
						16	210

Total rated load Outriggers at Minimum position

4.735m/7.695m boom		10.655m boom		13.565m boom		16.475m boom	
Working radius (m)	Total rated load (kg)	Working radius (m)	Total rated load (kg)	Working radius (m)	Total rated load (kg)	Working radius (m)	Total rated load (kg)
< 2.7	3830	3.5	3030	4	2230	5	1130
3.5	3030	4	2580	4.5	1830	5.5	980
4	2580	5	1680	5	1630	6	880
5	1680	6	1180	6	1180	7	730
6	1180	7	880	7	830	8	530
7	930	8	730	8	680	9	450
7.25	780	9	580	9	550	10	420
		10.2	400	10	430	11	370
				11	380	12	330
				12	350	13	280
				13.1	310	14	240
						15	190
						16	150
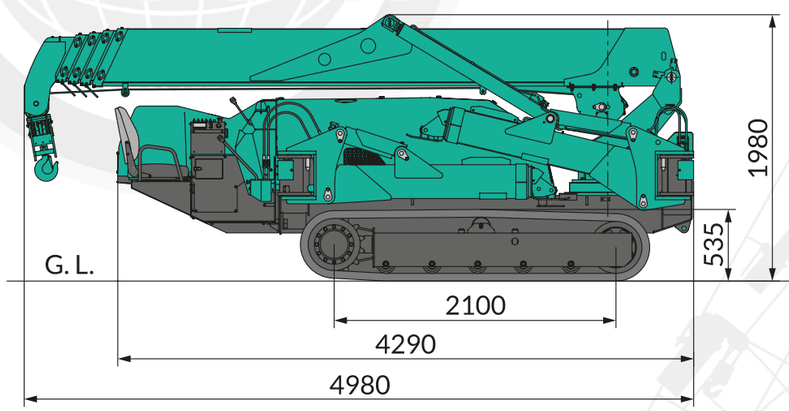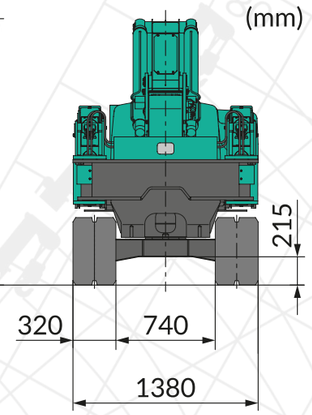
- When using two fall or single fall hooks, use the appropriate four fall Total Rated Load Chart but with a maximum load of: Two Fall - 1930kg, Single Fall - 970kg.