TECHNICAL DATA

TANDEM ROLLERS

BW 80 AD-5, BW 90 AD-5, BW 100 ADM-5

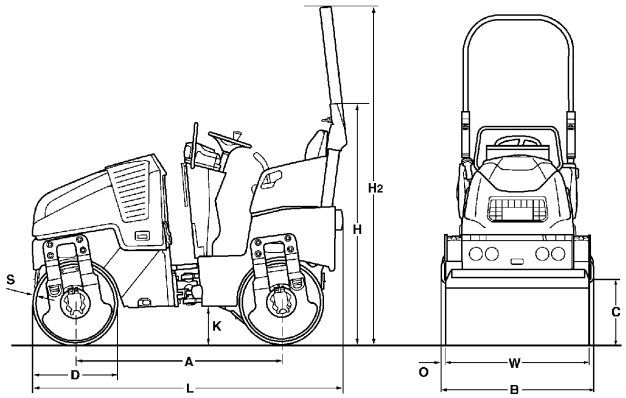

Dimensions in mm

	A	B	C	D	H	H2	K	L	O	S	W
BW 80 AD-5	1483	856	433	580	1627	2304	255	2194	28	13	800
BW 90 AD-5	1483	956	433	580	1627	2304	255	2194	28	12	900
BW 100 ADM-5	1483	1056	433	580	1627	2304	255	2194	28	12	1000

Shipping dimensions in m3	without ROPS	with ROPS
BW 80 AD-5	3,056	4,327
BW 90 AD-5	3,413	4,833
BW 100 ADM-5	3,770	5,338

Machine type	Compaction output (m3/h) at recommended soil layer thicknesses		
	Gravel, sand	**Mixed soil**	**Silt, clay**
BW 80 AD-5	60-110	42-85	33-65
BW 90 AD-5	70-120	45-90	35-70
BW 100 ADM-5	75-140	50-100	36-70

Machine type	Compaction output (t/h) at different asphalt layer thicknesses		
	2-4 cm	**6-8 cm**	**10-14 cm**
BW 80 AD-5	10-30	25-45	35-70
BW 90 AD-5	15-30	30-50	40-80
BW 100 ADM-5	15-40	35-60	50-90

Technical Data		BOMAG BW 80 AD-5	BOMAG BW 90 AD-5	BOMAG BW 100 ADM-5
Weights				
Operating weight CECE	kg	1.550	1.600	1.700
Average static linear load CECE	kg/cm	9,7	8,9	8,5
Grossweight	kg	1.900	1.900	1.900
Dimensions				
Working width	mm	800	900	1.000
Track radius, inner	mm	2.080	2.030	1.980
Driving Characteristics				
Speed	km/h	0- 10,0	0- 10,0	0- 10,0
Working speed with vibration	km/h	0- 10,0	0- 10,0	0- 10,0
Max. gradeability without/with vibr.	%	40/30	40/30	40/30
Drive				
Engine manufacturer		Kubota	Kubota	Kubota
Type		D 902	D 902	D 902
Emission stage		Stage V / TIER4f	Stage V / TIER4f	Stage V / TIER4f
Cooling		water	water	water
Number of cylinders		3	3	3
Performance ISO 14396	kW	15,1	15,1	15,1
Performance SAE J 1995	hp	20,2	20,2	20,2
Speed	min-1	3.000	3.000	3.000
Speed adjustment 1	min-1	2.100	2.100	2.100
Speed adjustment 2	min-1	3.000	3.000	3.000
Electric equipment	V	12	12	12
Driven drum		front + rear	front + rear	front + rear
Brakes				
Service brake		hydrost.	hydrost.	hydrost.
Parking brake		hydromec.	hydromec.	hydromec.
Steering				
Steering system		oscil.artic.	oscil.artic.	oscil.artic.
Steering method		hydrost.	hydrost.	hydrost.
Steering / oscillating angle +/-	grad	33/8	33/8	33/8
Crab walk	mm	0- 50	0- 50	0- 50
Exciter system				
Vibrating drum		front + rear	front + rear	front + rear
Drive system		hydrost.	hydrost.	hydrost.
Frequency	Hz	42/63	42/63	42/63
Amplitude	mm	0,50	0,50	0,40
Centrifugal force	kN	7/17	8/17	8/17
Sprinkler System				
Type of sprinkling		pressure	pressure	pressure
Capacities				
Fuel	l	30,0	30,0	30,0
Water	l	100,0	100,0	100,0

Technical modifications reserved. Machines may be shown with options.

Standard Equipment

- ☑ Hydrostatic travel and vibration drive
- ☑ Travel drive in series
- ☑ 2 scrapers per drum, spring loaded and tiltable
- ☑ Pressure sprinkler system with interval switch
- ☑ Multi function travel lever
- ☑ Multi-function display incl. operating hour meter
- ☑ Water level
- ☑ Emergency STOP
- ☑ Individual control, vibration
- ☑ Intelligent Vibration Control (IVC)
- ☑ Integrated storage compartment
- ☑ Adjustable operator's seat
- ☑ Seat contact switch
- ☑ Vandalism protection
- ☑ 12V socket
- ☑ Working lights front and rear
- ☑ Back-up alarm
- ☑ Lashing eyes, galvanized
- ☑ Single point lifting device
- ☑ Lockable engine hood made of composite material

Optional Equipment

- ☐ ROPS with safety belt
- ☐ * Foldable ROPS incl. seat belt
- ☐ Double travel lever
- ☐ Seat heating
- ☐ ECONOMIZER with asphalt temperature display
- ☐ Temperature display
- ☐ BOMAG TELEMATIC
- ☐ Theft protection
- ☐ Indicator and hazard lights
- ☐ Rotary beacon
- ☐ Optional lighting on ROPS
- ☐ Battery disconnect switch
- ☐ Environmentally compliant hydraulic oil
- ☐ Special painting
- ☐ Edge cutter
- ☐ Port for hydraulik breaker
- ☐ Backup warning buzzer with broadband technology
- ☐ ECOSTOP
- ☐ Outside mirrors
- ☐ Tablet holder set

* Standard delivery with CE conformity (valid within European Union)

BOMAG
Hellerwald
D-56154 Boppard
P.O. Box 5162
Tel. (0)6742 - 1000
Fax (0)6742 - 3090

BOMAG
FAYAT GROUP