COMPACT TRACK LOADER

TAKEUCHI™

From World First to World Leader

TL10V-2

Operating Weight: 4,605 kg

Product Features & Specifications

ENGINE

- EU Stage III B / EPA Tier 4 Emission Compliant
- DOC+DPF Exhaust After Treatment
- Active Power Control Power Management System
- ECO Mode
- Foot Throttle Control
- Automatic Fuel Bleed System
- Extended Life Coolant
- High Capacity Radiator and Hydraulic Oil Cooler Mounted Side by Side on Swing out Frame
- Double Element, Air Cleaner

ELECTRICAL

- 12 volt System with 60 amp Alternator
- Heavy Duty, Quick Access Battery
- LED Work Lights, Front and Rear
- 5.7" Color Multi-Informational Display with Rear View Camera
- Sealed Rocker Switches
- Back-up Alarm
- Horn

UNDERCARRIAGE AND FRAME

- 400 mm Quiet Track Design with Flotation Tread
- Long Track Frame
- Fully Welded Frame with Integrated Cross Members
- Rear Bumper Integrated into Frame
- Front and Rear Tie-Down and Lift Points
- Double Reduction Planetary Track Drives
- 2-Speed Travel

OPERATOR'S STATION

- Deluxe High Back Adjustable Suspension Seat
- Rear Pivoting Seat Bar with Integrated Arm Rests
- Retractable 2" Seat Belt
- ROPS/FOPS Structure
- FOPS Level 2 Roof Guard Kit (optional)
- Polycarbonate Front Door (optional)
- Pressurized Cab with Roll-up Door, Air Conditioning, Heat, Defrost, Front Wiper and AM/FM/MP3 Radio (Cab Only)
- Rear Wiper (Cab Standard Equipment in Europe only)
- 3 Point Seat Belt (optional)

HYDRAULIC & WORKING EQUIPMENT

- High Lift Vertical Arm Design
- Lower Front Cross Member
- Cushioned Arm Cylinders
- Arm Float with Detent
- Hydraulic Joystick Controls
- Proportional Auxiliary Controls with Detent
- Pressure Relieving Flat Faced Coupler Body
- Hydraulic Self Leveling (ON/OFF)
- Mechanical Quick Hitch
- 14-Pin Connector with Push Button Control (optional)
- Hydraulic Quick Hitch (optional)
- High Flow Auxiliary Hydraulics 124.0 L / min (optional)
- Secondary Auxiliary Circuit 71 L / min (optional)
- Ride Control (optional)
- Pattern Change Valve (ISO or H) (optional)

Convenient Service and Maintenance Access

Vertical Arm Path for Balance and Stability

TOUGH, POWERFUL, RELIABLE

Pilot Operated Controls

Battery Access Panel

Lower Cross Member & Step

Oversized Arm Cylinders

The TL10V-2 vertical arm track delivers excellent functionality, performance, comfort, and serviceability. It features a completely redesigned operator's station with a 5.7" color multi-information display and updated rocker switches that control a wide range of machine functions.

Cab models have a smooth, low effort overhead door that improves entry and egress and enables the loader to be operated with the door in the raised or lowered position.

An updated undercarriage with a wide block quiet ride track system provides better flotation, improved ride quality, and a reduction in noise and vibration. A powerful 54.6 kW engine meets the latest EU Stage III B / EPA Tier 4 emissions standards while delivering an outstanding blend of power and torque for impressive performance in the most demanding applications.

Spacious operator's station with easy to reach controls and switches.

OPERATING PERFORMANCE	
Operating Weight - Canopy	4,460 kg
Cab	4,605 kg
Tipping Load	3,270 kg
Rated Operating Capacity (ISO 14397-1) @ 35%	1,145 kg
Operating Load at 50% of Tipping Load	1,635 kg
Bucket Breakout Force	29 kN
Lift Arm Breakout Force	24kN
Traction Force	43.3 kN
Ground Pressure - Canopy	34.4 kPa
Ground Pressure - Cab	35.5 kPa
Travel speed - Low	7.7 km/h
High	11.3 km/h

* Operating capacity of compact track loaders is rated according to ISO 14397-1 at no more than 35% of the tipping load

HYDRAULIC SYSTEM	
Auxiliary Flow - Primary Circuit	71 L/min
Auxiliary Flow - High Flow (optional)	124.0 L/min
Auxiliary Flow - Secondary Circuit (optional)	71 L/min
Hydraulic System Pressure	24.0 MPa

ENGINE	
Make / Model	Kubota / V3307-CR-TE4B
Engine Displacement	3,331 ml
Rated Output (ISO 14396)	54.6 kW / 2,600 min-1
Maximum Torque	261.1 Nm / 1,500 min-1

FLUID CAPACITIES	
Engine Lubrication	11.2 L
Cooling System	15.0 L
Fuel Tank Capacity	81.0 L
Hydraulic Reservoir Capacity	36.0 L
Hydraulic System Capacity	65.0 L

SAFETY AND HEALTH	
Vibration Levels	
Hand / Arm	≦ 2.5 m/S² (8.2 ft/ S²)
Body	≦ 0.5 m/ S² (1.64 ft/ S²)
Noise Level	
Sound Power Level	LWA 103

5.7" Color Display

Rear View Camera

LED Work Lights

Multi-Function Switch Bank

TL10V-2 Compact Track Loader

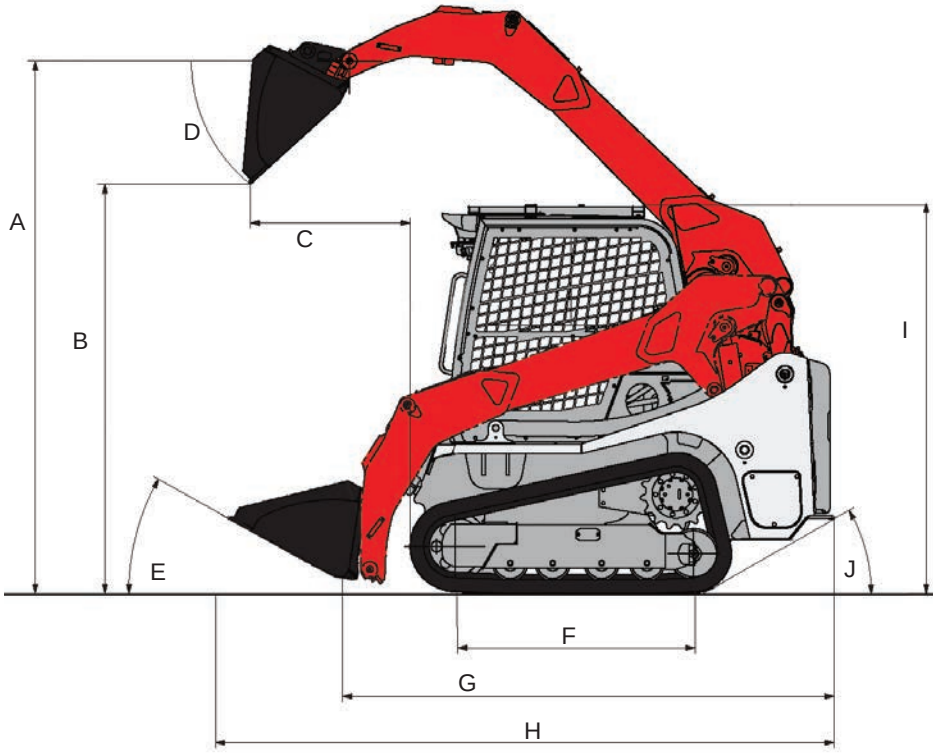

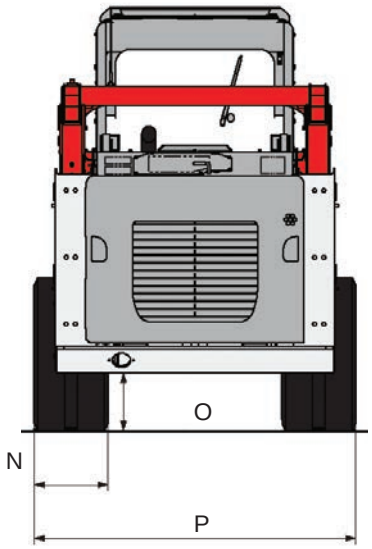

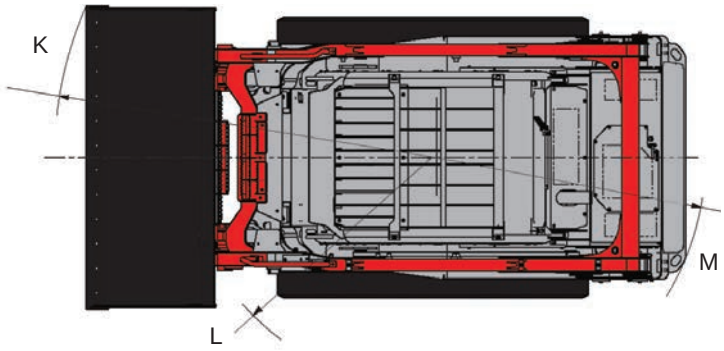

	MACHINE DIMENSIONS	
A	Maximum Lift Height to Bucket Pin	3,170 mm
B	Dump Height Fully Raised	2,435 mm
C	Dump Reach Fully Raised	950 mm
D	Dump Angle	40°
E	Rollback Angle	30°
F	Track Base	1,420 mm
G	Machine Length	2,925 mm
H	Transport Length	3,680 mm
I	Transport Height	2,270 mm
I'	Transport Height with Roof Guard	2,310 mm
J	Departure Angle	30°
K	Clearance Circle with Bucket	2,350 mm
L	Clearance Circle without Bucket	1,535 mm
M	Clearance Circle Rear	1,655 mm
N	Track Width	400 mm
O	Ground Clearance	320 mm
P	Overall Width without Bucket	1,740 mm

© 2016 Takeuchi MFG. Co., Ltd. All Rights Reserved. In accordance with our established policy of continued improvement, specifications and features are subject to change without notice. Pictures may show options other than standard equipment.

TAKEUCHI™
From world first to world leader

FORM: TL10V-2 Compact Track Loader Spec Sheet - Dec. 2016