9 Tonne Front Tip Cabbed

KEY FEATURES & BENEFITS - MACH2394

The Thwaites 9 Tonne Front Tip Cabbed, Stage V dumper is manufactured with contractors and hirers in mind – ensuring operator safety, reducing risk on site, and improving performance.

The cab is impact tested to level 2 ROPS 3471 and FOPS 3449. As such all Thwaites cabbed dumpers are approved for use by the UK Major Contractors Group. Front Tip dumpers allow the machine to be easily and safely loaded, with a straightforward tipping action that places the full bucket of spoil exactly where it is required.

Powered by a 3.6L Deutz turbo diesel engine fitted with a DPF to comply with EU Stage V emission regulations, you benefit from 55.4 kW peak power, 405 Nm of torque and no AdBlue requirement. Thwaites cabbed dumpers are available in a range of further sizes to suit your needs:

- 6 Tonne Front Tip Cabbed
- 6 Tonne Power Swivel Cabbed
- Super Vis Front Tip Cabbed

A Spring Activated Hydraulic Release (SAHR) Handbrake, 5" screen displaying 150° around machine visibility, LED road lights and twin LED beacons are available across the 9 Tonne range.

Safe, compliant and competitive.

This QR code will take you to a short and informative machine walkaround

Thwaites Ltd. Leamington Spa,
Warwickshire, CV32 7NQ. England
Tel +44 (0)1926 422471
www.thwaitesdumpers.co.uk

GET THE JOB DONE.

9 Tonne Front Tip Cabbed

DIMENSIONS & SPECIFICATIONS - MACH2394

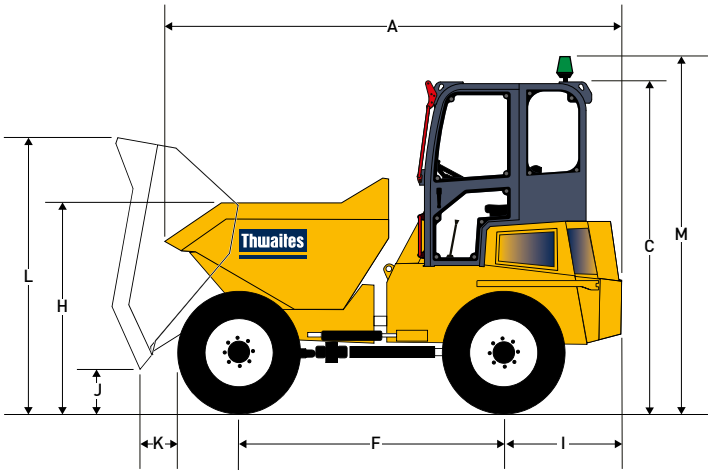

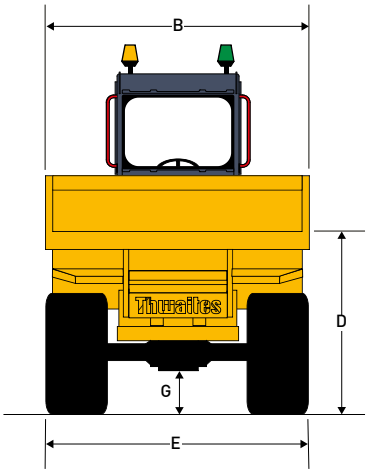

	(mm)
A	4670
B	2485
C	3285
D	1740
E	2444
F	2615
G	447
H	1975
I	1255
J	436
K	642
L	2840
M	3588

Weight

Unladen	5390 kg
Shipping	5266 kg

Capacities

Max safe load	9000 kg
Heaped	4600 litres
Struck	3830 litres
Water	2155 litres

Engine

- Deutz TCD 3.6 L4, water-cooled, 4-cylinder, charged air cooled turbo, fuel injected diesel and after treatment Diesel Particulate filter
- Power 55.4 kW/ 74 bhp at 2200 rpm
- Torque 405 Nm (299 lbf ft).

Noise Levels

- Operator's ear 84 LpA / airborne level 101 LwA

Transmission

- Torque converter four speed forward and reverse Powershift transmission, column mounted speed and directional control lever

Speeds

Forward and Reverse		
1	4.2 km/h	(2.6 mph)
2	7.5 km/h	(4.6 mph)
3	13.7 km/h	(8.5 mph)
4	24.3 km/h	(15 mph)

Brakes and Axles

- Totally enclosed multiplate oil-immersed discs mounted on rear axle & auto wear adjustment
- Hand operated parking brake (SAHR)

Kinglink Chassis

- Constructed from folded steel plate, with three point Kinglink giving articulation and oscillation for better stability, traction and safety on site

Skip

- Hydraulically operated, 6mm steel base plate
- Skip mouth & sides reinforced with box sections

Seating & Controls

- Adjustable suspension seat with high-vis seat belt
- Clear operators display unit contains all warning lamps

Service Access

- Lockable engine cover provides access to the engine
- Keyless lockable side covers for ground level service points

Electrics

- Fuse & relay are housed on a central power distribution board
- Main harness is fully enclosed in solid conduit and incorporates the engine diagnostic port

Steering and Hydraulics

- Hydraulic power steering
- Return line filtration for all services
- Hydraulic test point fitted as standard

Tank Capacities

Fuel	72 litres
Hydraulic	50 litres

Turning Circle

17.6m

Standard Equipment

- Full LED road lighting incl. DRL (Daylight Running Lights)
- Camera and dashpanel monitor
- LED beacons
- Fan guard
- Reverse alarm
- Air conditioning

Optional Equipment

- Adjustable work lights
- Air suspension seat
- Rear wiper system,
- Wheel nut indicator
- GPS speedometer
- USB socket

Thwaites Ltd. Leamington Spa,
Warwickshire, CV32 7NQ. England
Tel +44 (0)1926 422471
www.thwaitesdumpers.co.uk

Images are representative, but specific details or equipment may vary by country.
We reserve the right to change any and all specifications without prior notice. **11/2021**