The ultimate articulated dump truck.

Bergmann C815s.

Bergmann. Built for you.

Made in Germany.

BERGMANN

BERGMANN C 815 s

Rear tip dumper

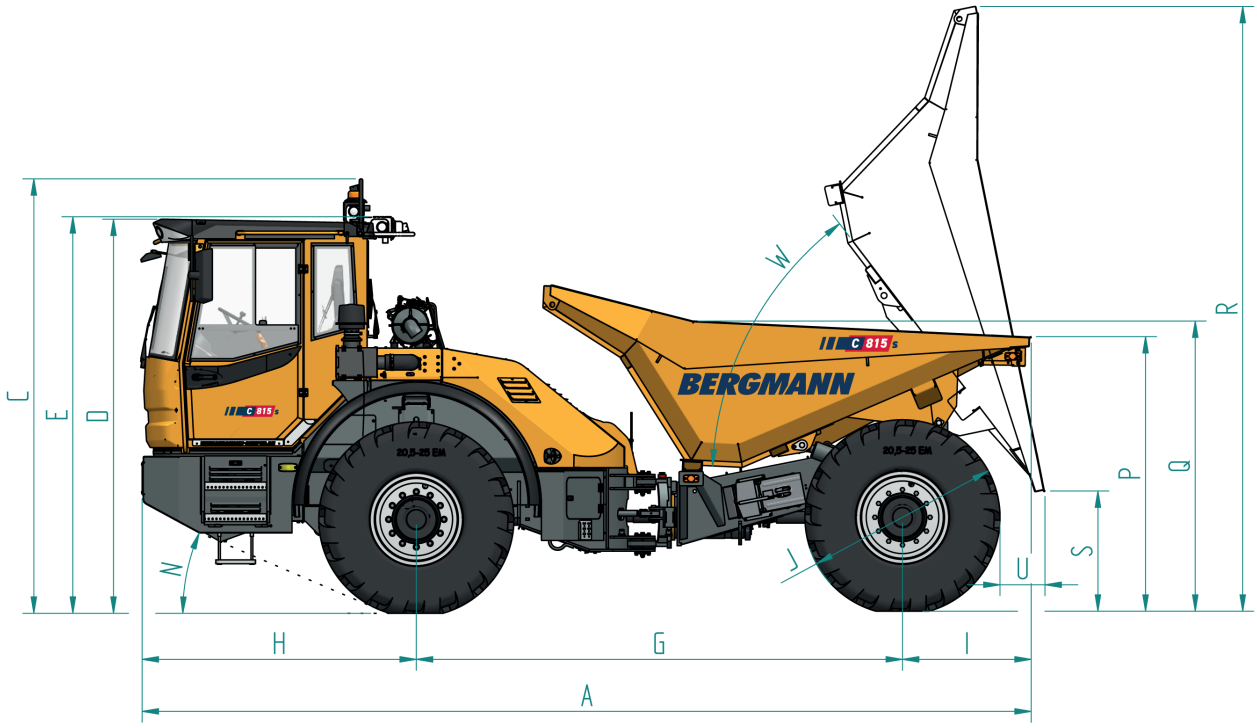

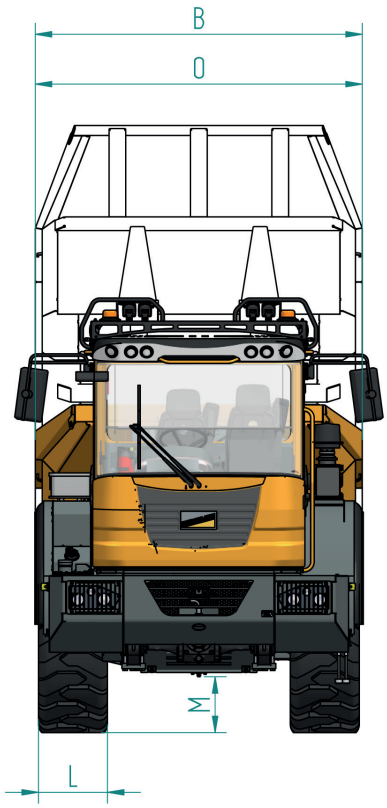

Dimensions		
A	6,834 mm	22.42 ft
B	2,505 mm	8.22 ft
C	3,338 mm	10.95 ft
D	3,028 mm	9.93 ft
E	3,047 mm	10.00 ft
G	3,737 mm	12.26 ft
H	2,108 mm	6.92 ft
I	989 mm	3.24 ft
J	1,500 mm	4.92 ft
L	529 mm	1.74 ft
M	429 mm	1,41 ft
O	2,505 mm	8.22 ft
P	2,110 mm	6.92 ft
Q	2,230 mm	7.32 ft
R	4,647 mm	15.25 ft
S	923 mm	3.03 ft
W		76°

Weight		
Empty weight	9,080 kg	20,017 lb
Payload	12,000 kg	26,455 lb

Bucket capacity		
Struck	5 m^3	6.5 yd^3
Heaped	8 m^3	10.5 yd^3

All illustrations, dimensions and weights do not necessarily correspond to the standard equipment and are non-binding with regard to tolerance deviations on component level. We reserve the right to make technical changes.

Bigger. Faster. Better.

Bergmann C815s.

Move more for less.

Superlative technology, impressively delivered. Safe, comfortable, long-lasting.

The Bergmann C815s combines safety and ride comfort at the very highest level. It demonstrates that safety, efficiency, off-road capability and driving comfort all go together perfectly. As well as the very highest standards of operational safety, the C815s design makes industrial health and safety a top priority.

One of a kind

The rotatable operators console option is unique in its class. With top visibility, it offers a forward speed of 25 mph (40 km/h) and a reverse speed of 19 mph (30 km/h), making it a top performing ADT, even on cramped job sites.

Proven reliability for over 10 years:

- Drainage and road building
- Underground and tunnel construction
- Energy supply (track construction)
- Gardening and landscaping
- Land improvement
- Pipeline laying
- Quarrying
- Sports ground construction

Cabin with optional swivel console and intuitive operability.

Good access to all maintenance points with the patented hood system.

Articulated swivel joint with stabilization cylinder.

The result of our longstanding experience, innovation and quality.

Operator friendly

Comfort cabin with swivelling operator's position and well-designed joystick, allowing all functions to be operated with one hand. This ensures increased safety and comfort, not to mention greater comfort in the workplace.

Safe and easy to maintain

The central electrics and climate control technology is positioned in such a way that it can be accessed at any time.

Economical and climate-friendly

Powerful Cummins engine for fuel-efficient, low-emission use in line with current emission regulations.

Quick working

Suspended front axle for comfortable working even at high speeds (25 mph (40 km/h) forwards and 19 mph (30 km/h) backwards).

Optimal servicing times

Great accessibility due to the patented hood system. All filters can be reached from the ground via the wide-opening bonnet.

Economical transport of materials

Depending on the place of use and material, you can choose between rear, three-way or swivel dumps.

Low ground pressure

Optimum ground pressure is ensured at all times by a wide range of tires for different types of terrain.

Well protected

The articulated pendulum joint with stabilization cylinder ensures optimum traction and high stability over the ground. It also provides greater safety while working.

Bigger. Faster. Better.

You know their machine, right?

You should know this one!

+ 20 % payload
+ 43 % load volume
+ 31 % efficiency*
+ 50 % effectiveness*

Conventional compact tipper

Bergmann C815s

* Results of a field test in autumn 2017.
Efficiency = transported material in m^3 per liter of fuel.
Effectiveness = transported material in m^3 for operating time.

Saves time and money.
Because it simply performs better.
Bergmann C815s. **Try it now!**

Technical specifications
Bergmann C815s with swivel dump

Payload	**12,000 kg**	**26,455 lb**
Capacity heaped	**8.0 m^3**	**10.5 yd^3**
Total length	7,129 mm	23.39 ft
Total width	2,500 mm	8.20 ft
Clearance height without beacon light	3,028 mm	9.93 ft
Ground clearance	424 mm	1.39 ft
Dumping height	1,441 mm	4.73 ft
Load height (front)	2,273 mm	7.46 ft
Engine power	119 kW	159.58 hp
Empty weight	11,140 kg	24,559 lb