S SERIES

CLARK
THE FORKLIFT

S40s/45s/50s/50/55

Diesel or LPG engine
Pneumatic or Superelastic Tyres
4000 kg 4500 kg 5000 kg 5500 kg

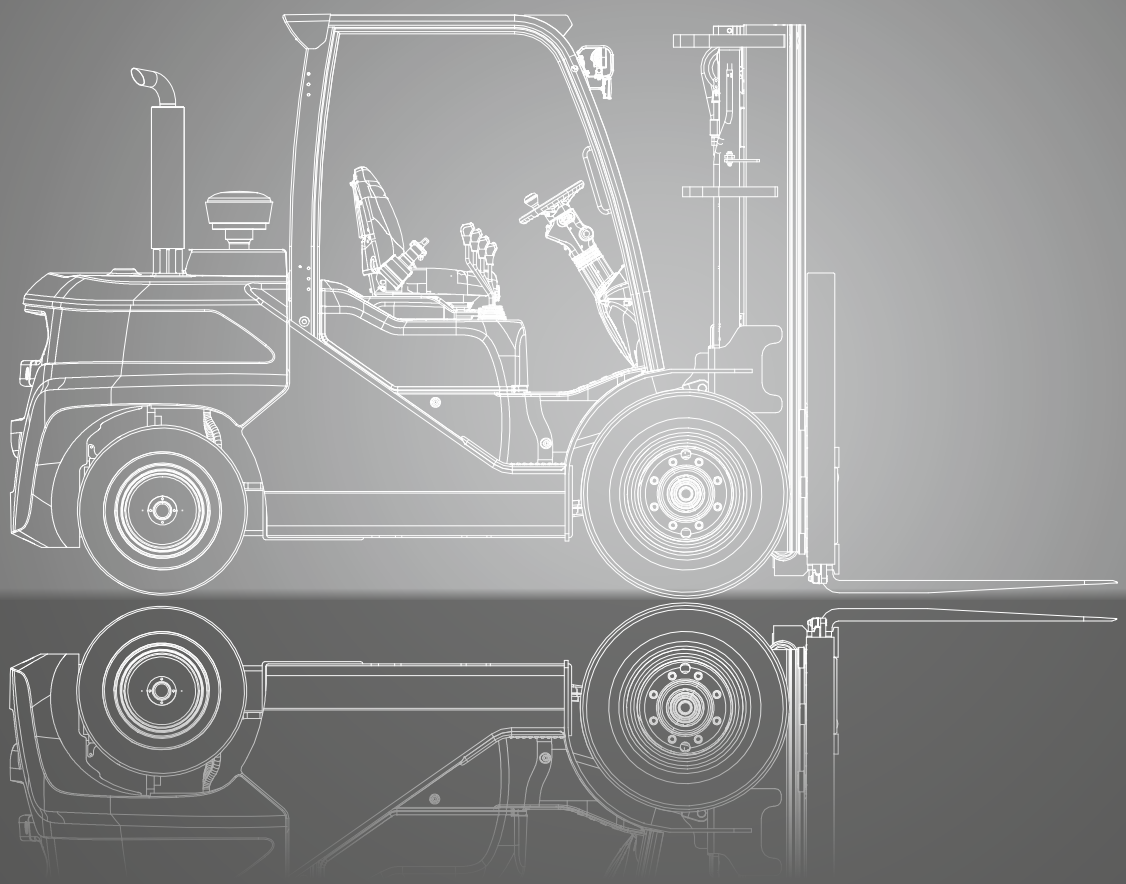

EU-Stage 5 -Diesel
EU-Stage 5 -LPG

www.clarkmheu.com

DIMENSIONS

S40s/45s/50s/50/55

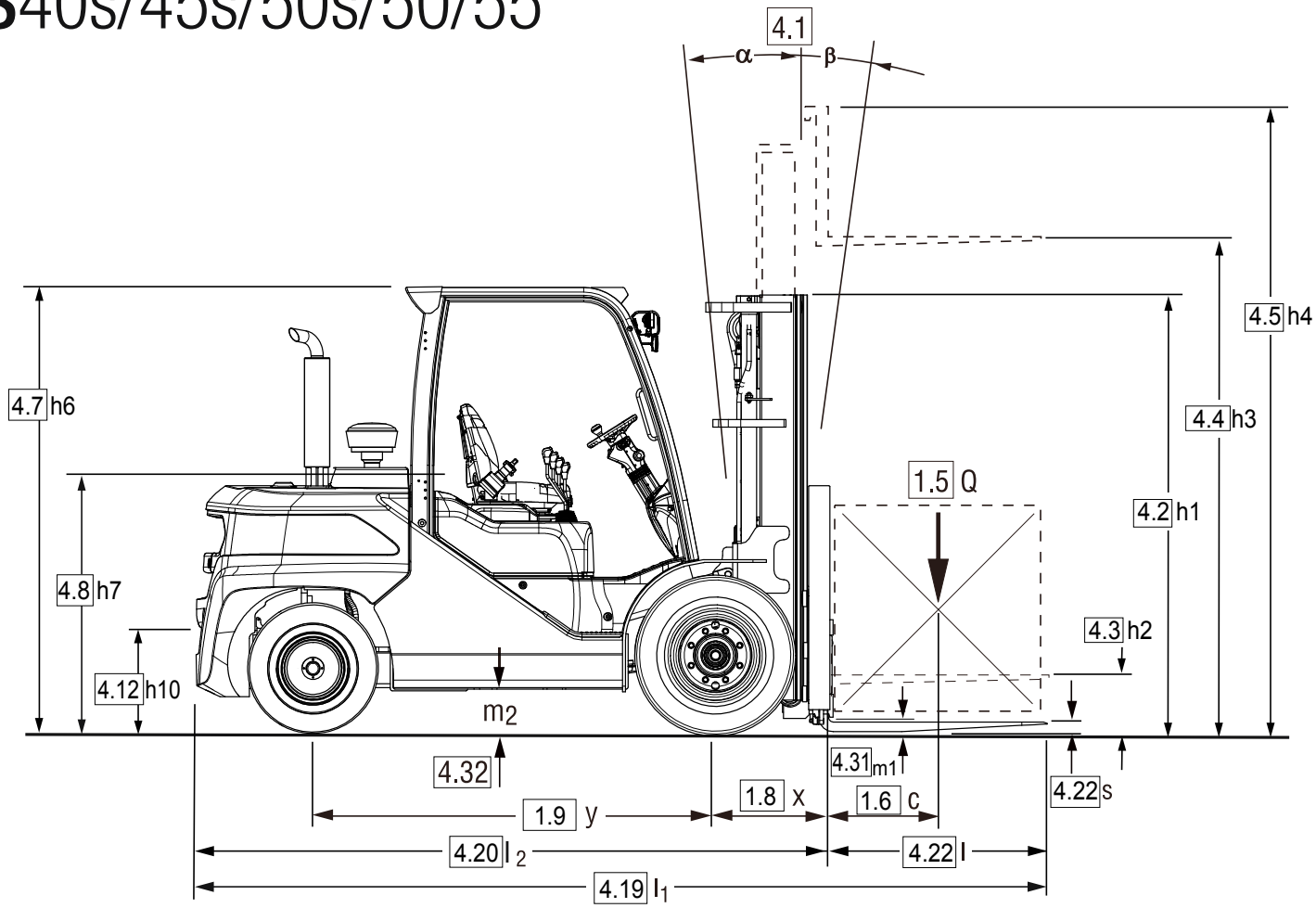

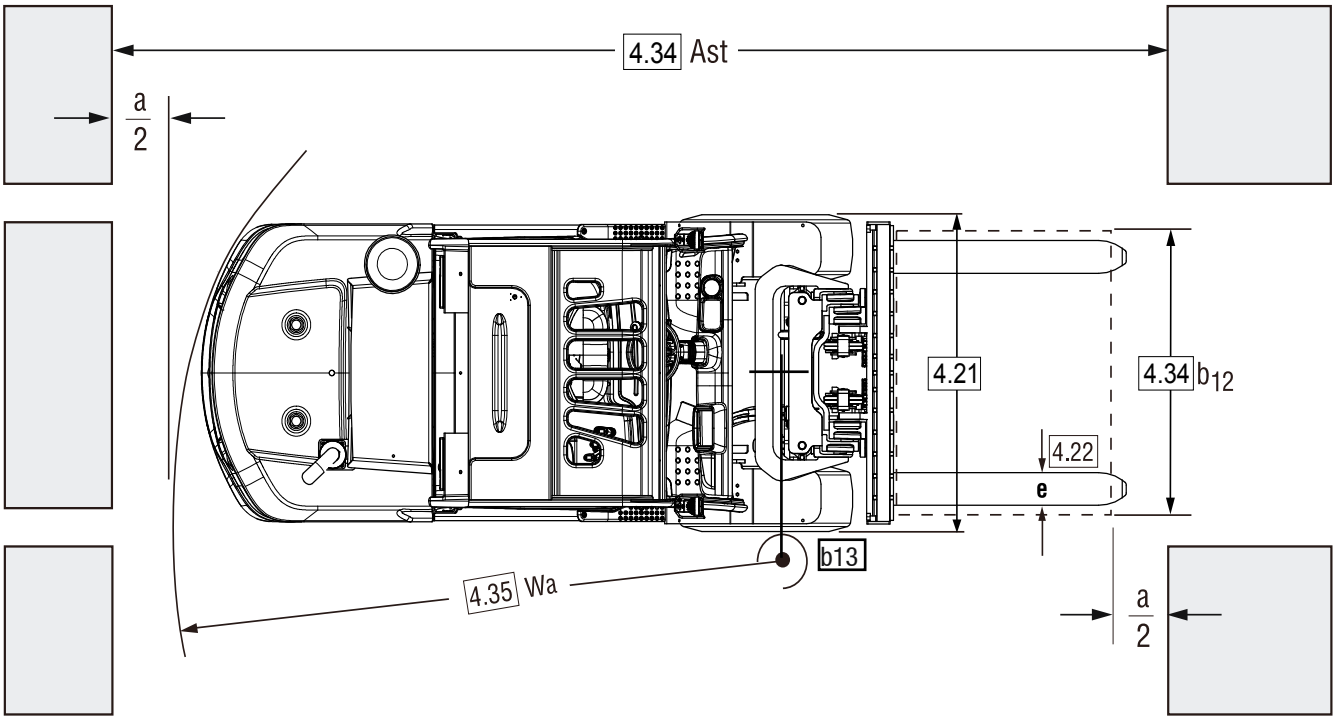

For corresponding data see specification chart.

a = 200 mm
Ast = Wa + x + l6 + a
applies only if b12/2 < b13

SPECIFICATIONS

Product Specifications acc. to VDI 2198

	1.1 Manufacturer (Abbreviation)		CLARK	CLARK	CLARK	CLARK	CLARK
Specifications	1.2 Manufacturer's designation		S40sD	S45sD	S50sD	S50D	S55D
	1.3 Drive unit Diesel, LPG		Diesel	Diesel	Diesel	Diesel	Diesel
	1.4 Operator type stand on / driver seated		Driver Seated	Driver Seated	Driver Seated	Driver Seated	Driver Seated
	1.5 Load capacity / rated load	Q (kg)	4000	4500	4990	5000	5500
	1.6 Load centre distance	c (mm)	500	500	500	600	600
	1.8 Load centre distance, centre of drive axle to fork face	x (mm)	563	563	568	578	578
	1.9 Wheelbase	y (mm)	1950	1950	2100	2100	2100
Weight	2.1 Service weight *5	kg	5898 (6039)	6275 (6416)	6747 (6872)	7171 (7277)	7374 (7480)
	2.2 Axle loading, laden front / rear *5	kg	8803 / 1094 (8955 / 1084)	9501 / 1274 (9652 / 1264)	10535 / 1212 (10696 / 1176)	10716 / 1455 (10835 / 1442)	11397 / 1477 (11515 / 1465)
	2.3 Axle loading, unladen front / rear *5	kg	2623 / 3275 (2774 / 3265)	2548 / 3728 (2699 / 3717)	2992 / 3755 (3129 / 3743)	2912 / 4259 (3030 / 4247)	2812 / 4562 (2930 / 4550)
Tyres, Chassis	3.1 Tyre type, P = pneumatic, SE = superelastic *1		P	P	P	P	P
	3.2 Tyre size, front *5		8.25 X 15 - 14 PR	8.25 X 15 - 16 PR	300 X 15 - 18 PR	300 X 15 - 18 PR	300 X 15 - 20 PR
	3.3 Tyre size, rear		7.00 X 12 - 14 PR	7.00 X 12 - 14 PR	7.00 X 12 - 14 PR	7.00 X 12 - 14 PR	7.00 X 12 - 14 PR
	3.5 Wheels, number front/rear (x = drive wheels) *5		2 (4) / 2	2 (4) / 2	2 (4) / 2	2 (4) / 2	2 (4) / 2
	3.6 Tread, front *5	b10 (mm)	1145 (1314)	1145 (1314)	1152 (1314)	1152 (1314)	1152 (1314)
	3.7 Tread, rear	b11 (mm)	1134	1134	1134	1134	1134
Dimensions	4.1 Tilt of upright/fork carriage, α /β	Grad	10 / 8	10 / 8	10 / 8	10 / 8	10 / 8
	4.2 Height, upright lowered *5	h1(mm)	2234 (2207)	2234 (2207)	2234 (2207)	2242 (2207)	2242 (2207)
	4.3 Freelift	h2(mm)	156	156	156	166	166
	4.4 Lift height *2	h3(mm)	3300	3300	3300	3300	3300
	4.5 Height, upright extended (with LBR)	h4(mm)	4552	4552	4552	4552	4552
	4.7 Height overheadguard Std /cabin *5	h6(mm)	2313 / 2313 (2303 / 2303)	2313 / 2313 (2303 / 2303)	2313 / 2313 (2303 / 2303)	2313 / 2313 (2303 / 2303)	2311 / 2313 (2299 / 2299)
	4.8 Seat height	h7(mm)	1270	1270	1270	1270	1268
	4.12 Coupling height	h10(mm)	460	460	460	460	460
	4.19 Overall length	l1(mm)	4097	4148	4441	4505	4555
	4.20 Length to face of forks	l2(mm)	3027	3078	3221	3285	3335
	4.21 Width *5	b1. b2 (mm)	1380 (1730)	1380 (1730)	1380 (1730)	1380 (1730)	1380 (1730)
	4.22 Fork dimensions	s • e • l (mm)	50 x 122 x 1070	50 x 122 x 1070	50 x 150 x 1220	60 x 150 x 1220	60 x 150 x 1220
	4.23 Fork carriage DIN 15173, A, B		Class III A	Class III A	Class III A	Class IV A	Class IV A
	4.24 Fork carriage width *5	b3 (mm)	1348 (1678)	1348 (1678)	1348 (1678)	1348 (1678)	1348 (1678)
	4.31 Ground clearance minimum *5	m1 (mm)	169 (142)	169 (142)	169 (142)	169 (142)	169 (142)
	4.32 Ground clearance centre of wheelbase *5	m2 (mm)	215 (189)	215 (189)	215 (189)	215 (189)	215 (189)
	4.33 Aisle width for pallets (l6·b12) 1000 x 1200 crossways	Ast(mm)	4499	4549	4645	4719	4780
	4.34 Aisle width for pallets (l6·b12) 800 x 1200 lengthways	Ast(mm)	4699	4749	4845	4919	4980
	4.35 Turning radius	Wa(mm)	2471	2471	2614	2614	2614
	4.36 Internal turning radius	b13 (mm)	874	874	905	905	905
Performances	5.1 Travel speed laden/unladen *5	km/h	22.0 / 21.0 (22.0 / 21.0)	21.5 / 22.5 (21.5 / 22.5)	21.5 / 22.5 (21.5 / 22.5)	21.5 / 22.5 (21.5 / 22.5)	21.5 / 22.5 (21.5 / 22.5)
	5.2 Lift speed laden/unladen	m/s	0.55 / 0.57 (0.55 / 0.57)	0.55 / 0.57 (0.55 / 0.57)	0.55 / 0.57 (0.55 / 0.57)	0.50 / 0.57 (0.50 / 0.57)	0.48 / 0.57 (0.48 / 0.57)
	5.3 Lowering speed laden/unladen	m/s	0.50 / 0.47	0.50 / 0.47	0.50 / 0.47	0.50 / 0.47	0.50 / 0.47
	5.6 Max. drawbar pull laden/unladen *3	N	34.433 / 19.914	36.002 / 22.072	33.942 / 22.406	33.942 / 22.406	33.844 / 22.170
	5.8 Max. gradeability laden/unladen *3 *5	%	32.6 / 27.0 (34.8 / 27.0)	31.0 / 26.5 (32.5 / 26.5)	25.0 / 26.5 (25.0 / 26.5)	25.0 / 26.5 (25.0 / 26.5)	24.8 / 26.0 (26.8 / 26.0)
	5.9 Acceleration time laden/unladen (0 - 15 m)	s	-	-	-	-	-
	5.10 Service brake		Wet disc brake	Wet disc brake	Wet disc brake	Wet disc brake	Wet disc brake
Engine	7.1 Manufacturer / Type *6		Kubota / V3800-CR-TE5B	Kubota / V3800-CR-TE5B	Kubota / V3800-CR-TE5B	Kubota / V3800-CR-TE5B	Kubota / V3800-CR-TE5B
	7.2 Rated output acc. To ISO 1585	kW	55.4	55.4	55.4	55.4	55.4
	7.3 Rated speed	min-1	2200	2200	2200	2200	2200
	7.4 No. of cylinders / displacement	/cm³	4 / 3.8	4 / 3.8	4 / 3.8	4 / 3.8	4 / 3.8
	7.5 Fuel consumption acc. VDI-Cyclus Diesel = l/h. Gas = kg/h		-	-	-	-	-
Misc.	8.1 Type of drive control		hydrodynamic	hydrodynamic	hydrodynamic	hydrodynamic	hydrodynamic
	8.2 Operating pressure for attachments *7	bar	Adjustable	Adjustable	Adjustable	Adjustable	Adjustable
	8.3 Oil volume for attachments	l/min	max. 35	max. 35	max. 35	max. 35	max. 35
	8.4 Sound level, driver's ear *4	dB (A)	83	83	83	83	83
	8.5 Towing coupling, class/type DIN		PIN	PIN	PIN	PIN	PIN

*1 Option with super-elastic tyres *2 Further lift heights see upright table *3 with 1.6 km/h Without load at friction coefficient μ=0.8 *4 Equivalent permanent sound-pressure level L pAeq, T in accordance with DIN EN 12053 (previously DIN 45635-36) *5 Values for Wide or Dual Tyre (Option) *6 Diesel = Stage 5 / LPG= Stage 5 *7 Max. 140 bar

All values shown are for a standard lift truck with standard equipment. If the truck is supplied with options, values may change.
All values given may vary + 5 % and - 10 % due the engine and specifications and represent nominal values obtained under typical operating conditions.

SPECIFICATIONS

Product Specifications acc. to VDI 2198

	1.1 Manufacturer (Abbreviation)		CLARK	CLARK	CLARK	CLARK	CLARK
Specifications	1.2 Manufacturer's designation		S40sL	S45sL	S50sL	S50L	S55L
	1.3 Drive unit Diesel, LPG		LPG	LPG	LPG	LPG	LPG
	1.4 Operator type stand on / driver seated		Driver Seated	Driver Seated	Driver Seated	Driver Seated	Driver Seated
	1.5 Load capacity / rated load	Q (kg)	4000	4500	4990	5000	5500
	1.6 Load centre distance	c (mm)	500	500	500	600	600
	1.8 Load centre distance, centre of drive axle to fork face	x (mm)	563	563	568	578	578
	1.9 Wheelbase	y (mm)	1950	1950	2100	2100	2100
Weight	2.1 Service weight *5	kg	5839 (5980)	6216 (6357)	6672 (6797)	7096 (7202)	7299 (7405)
	2.2 Axle loading, laden front / rear *5	kg	8742 / 1097 (8893/ 1086)	9439 / 1277 (9591/ 1266)	10464 / 1208 (10625/ 1172)	10645 / 1451 (10764/ 1438)	11326 / 1473 (11444/ 1461)
	2.3 Axle loading, unladen front / rear *5	kg	2561 / 3277 (2713 / 3267)	2486 / 3730 (2638 / 3720)	2921 / 3751 (3058 / 3739)	2841 / 4256 (2959 / 4243)	2841 / 4558 (2859 / 4546)
Tyres, Chassis	3.1 Tyre type, P = pneumatic, SE = superelastic *1		P	P	P	P	P
	3.2 Tyre size, front *5		8.25 X 15 - 14 PR	8.25 X 15 - 16 PR	300 X 15 - 18 PR	300 X 15 - 18 PR	300 X 15 - 20 PR
	3.3 Tyre size, rear		7.00 X 12 - 14 PR	7.00 X 12 - 14 PR	7.00 X 12 - 14 PR	7.00 X 12 - 14 PR	7.00 X 12 - 14 PR
	3.5 Wheels, number front/rear (x = drive wheels) *5		2 (4) / 2	2 (4) / 2	2 (4) / 2	2 (4) / 2	2 (4) / 2
	3.6 Tread, front *5	b10 (mm)	1145 (1314)	1145 (1314)	1152 (1314)	1152 (1314)	1152 (1314)
	3.7 Tread, rear	b11 (mm)	1134	1134	1134	1134	1134
Dimensions	4.1 Tilt of upright/fork carriage, α /β	Grad	10 / 8	10 / 8	10 / 8	10 / 8	10 / 8
	4.2 Height, upright lowered *5	h1(mm)	2234 (2207)	2234 (2207)	2234 (2207)	2242 (2207)	2242 (2207)
	4.3 Freelift	h2(mm)	156	156	156	166	166
	4.4 Lift height *2	h3(mm)	3300	3300	3300	3300	3300
	4.5 Height, upright extended (with LBR)	h4(mm)	4552	4552	4552	4552	4552
	4.7 Height overheadguard Std /cabin *5	h6(mm)	2313 / 2313 (2303 / 2303)	2313 / 2313 (2303 / 2303)	2313 / 2313 (2303 / 2303)	2311 / 2313 (2299 / 2299)	2330 (2300)
	4.8 Seat height	h7(mm)	1270	1270	1270	1270	1268
	4.12 Coupling height	h10(mm)	460	460	460	460	460
	4.19 Overall length	l1(mm)	4097	4148	4441	4505	4555
	4.20 Length to face of forks	l2(mm)	3027	3078	3221	3285	3335
	4.21 Width *5	b1. b2 (mm)	1380 (1730)	1380 (1730)	1380 (1730)	1380 (1730)	1380 (1730)
	4.22 Fork dimensions	s • e • l (mm)	50 x 122 x 1070	50 x 122 x 1070	50 x 150 x 1220	60 x 150 x 1220	60 x 150 x 1220
	4.23 Fork carriage DIN 15173, A, B		Class III A	Class III A	Class III A	Class IV A	Class IV A
	4.24 Fork carriage width *5	b3 (mm)	1348 (1678)	1348 (1678)	1348 (1678)	1348 (1678)	1348 (1678)
	4.31 Ground clearance minimum *5	m1 (mm)	169 (142)	169 (142)	169 (142)	169 (142)	169 (142)
	4.32 Ground clearance centre of wheelbase *5	m2 (mm)	215 (189)	215 (189)	215 (189)	215 (189)	215 (189)
	4.33 Aisle width for pallets (l6·b12) 1000 x 1200 crossways	Ast(mm)	4499	4549	4645	4719	4780
	4.34 Aisle width for pallets (l6·b12) 800 x 1200 lengthways	Ast(mm)	4699	4749	4845	4919	4980
	4.35 Turning radius	Wa(mm)	2471	2471	2614	2614	2614
	4.36 Internal turning radius	b13 (mm)	874	874	905	905	905
Performances	5.1 Travel speed laden/unladen *5	km/h	18.0/18.7 (18.0/18.7)	18.0/18.7 (18.0/18.7)	17.0/18.0 (17.0/18.0)	17.0/18.0 (17.0/18.0)	17.0/18.0 (17.0/18.0)
	5.2 Lift speed laden/unladen	m/s	0.44/0.47 (0.44/0.47)	0.44/0.47 (0.44/0.47)	0.44/0.47 (0.44/0.47)	0.44/0.47 (0.44/0.47)	0.44/0.47 (0.44/0.47)
	5.3 Lowering speed laden/unladen	m/s	0.50 / 0.47	0.50 / 0.47	0.50 / 0.47	0.50 / 0.47	0.50 / 0.47
	5.6 Max. drawbar pull laden/unladen *3	N	36.591 / 27.762	36.101 / 26.977	35.365 / 27.203	35.365 / 27.203	35.610 / 28.282
	5.8 Max. gradeability laden/unladen *3 *5	%	37.0/32.0 (38.5/32.0)	35.0/30.0 (37.4/30.0)	26.0/22.0 (26.0/22.0)	26.0/22.0 (26.0/22.0)	26.0/20.0 (26.5 / 20.0)
	5.9 Acceleration time laden/unladen (0 - 15 m)	s	-	-	-	-	-
	5.10 Service brake		Wet disc brake	Wet disc brake	Wet disc brake	Wet disc brake	Wet disc brake
Engine	7.1 Manufacturer / Type *6		Kubota / WG3800-L-E3C	Kubota / WG3800-L-E3C	Kubota / WG3800-L-E3C	Kubota / WG3800-L-E3C	Kubota / WG3800-L-E3C
	7.2 Rated output acc. To ISO 1585	kW	63.6	63.6	63.6	63.6	63.6
	7.3 Rated speed	min-1	2200	2200	2200	2200	2200
	7.4 No. of cylinders / displacement	/cm³	4 / 3.8	4 / 3.8	4 / 3.8	4 / 3.8	4 / 3.8
	7.5 Fuel consumption acc. VDI-Cyclus Diesel = l/h. Gas = kg/h		-	-	-	-	-
Misc.	8.1 Type of drive control		hydrodynamic	hydrodynamic	hydrodynamic	hydrodynamic	hydrodynamic
	8.2 Operating pressure for attachments *7	bar	Adjustable	Adjustable	Adjustable	Adjustable	Adjustable
	8.3 Oil volume for attachments	l/min	max. 35	max. 35	max. 35	max. 35	max. 35
	8.4 Sound level, driver's ear *4	dB (A)	83	83	83	83	83
	8.5 Towing coupling, class/type DIN		PIN	PIN	PIN	PIN	PIN

*1 Option with super-elastic tyres *2 Further lift heights see upright table *3 with 1.6 km/h Without load at friction coefficient μ=0.8 *4 Equivalent permanent sound-pressure level L pAeq, T in accordance with DIN EN 12053 (previously DIN 45635-36) *5 Values for Wide or Dual Tyre (Option) *6 Diesel = Stage 5 / LPG= Stage 5 *7 Max. 140 bar

All values shown are for a standard lift truck with standard equipment. If the truck is supplied with options, values may change.
All values given may vary + 5 % and - 10 % due the engine and specifications and represent nominal values obtained under typical operating conditions.

GENERAL DATA

Truck Capacities Capacity at different load center

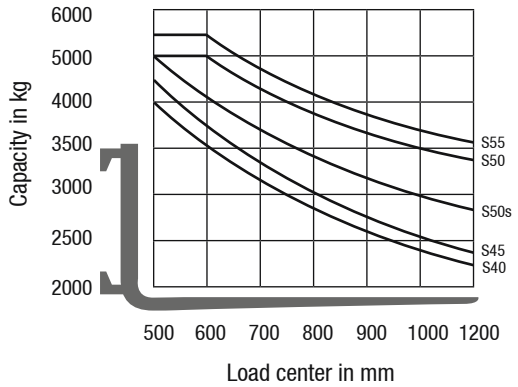

Note:
The listed capacities are valid only for the standard upright in vertical position with standard fork carriage and standard forks, up to max. lifting height of 3300 mm. The centre of gravity of the load may be displaced by max. 100 mm against the longitudinal centre plane of the truck. Load centre is determined from top and front face of the forks. The values are based on a 1000 mm cube load configuration with the centre of gravity at the true centre of the cube. With upright tilted forward lower capacity values are valid. Attachments, longer forks, exceptional load dimensions and higher lifting heights can reduce the capacity.

Please talk to your CLARK dealer if you require further information.

Upright table S40s/45s

Mast type	Maximum Fork Height (h3)	Mast Lowered (h1)*	Mast Extended (h4)		Free Lift (h2)	
			with load backrest	without load backrest	with load backrest*	without load backrest
	mm	mm	mm	mm	mm	mm
Standard	3000	2234/2207	4252	3769	156	156
	3300	2384/2357	4520	4037		
	3500	2484/2457	4720	4237		
	3700	2584/2557	4920	4437		
	4000	2734/2707	5220	4737		
	4500	2984/2957	5720	5237		
	5000	3234/3207	6220	5737		
Triplex	3700	2016/1989	4920	4437	796/769	1279/1252
	4000	2116/2089	5220	4737	896/869	1379/1352
	4300	2216/2189	5520	5037	996/969	1479/1452
	4500	2283/2256	5720	5237	1063/1036	1546/1519
	4800	2383/2356	6020	5537	1163/1136	1646/1619
	5000	2450/2423	6220	5737	1230/1203	1713/1686
	5500	2617/2590	6720	6237	1397/1370	1880/1853
	6000	2784/2757	7220	6737	1564/1537	2047/2020
	6500	2951/2924	7720	7237	1731/1704	2214/2187
	7000	3118/3091	8220	7737	1898/1871	2381/2354
HI–LO	2700	2133/2106	3920	3437	913/886	1396/1369
	3000	2283/2256	4220	3737	1063/1036	1546/1519
	3300	2433/2406	4520	4037	1213/1186	1696/1669

* Single / Dual Tyre

Upright table S50s

Mast type	Maximum Fork Height (h3)	Mast Lowered (h1)*	Mast Extended (h4)		Free Lift (h2)	
			with load backrest	without load backrest	with load backrest*	without load backrest*
	mm	mm	mm	mm	mm	mm
Standard	3000	2234/2207	4252	3962	156	156
	3300	2384/2357	4520	4037		
	3500	2484/2457	4720	4237		
	3700	2584/2557	4920	4437		
	4000	2734/2707	5220	4737		
	4500	2984/2957	5720	5237		
	5000	3234/3207	6220	5737		
Triplex	3700	2016/1989	4920	4437	796/769	1086/1059
	4000	2116/2089	5220	4737	896/869	1186/1159
	4300	2216/2189	5520	5037	996/969	1286/1259
	4500	2283/2256	5720	5237	1063/1036	1353/1326
	4800	2383/2356	6020	5537	1163/1136	1453/1426
	5000	2450/2423	6220	5737	1230/1203	1520/1493
	5500	2617/2590	6720	6237	1397/1370	1687/1660
	6000	2784/2757	7220	6737	1564/1537	1854/1827
	6500	2951/2924	7720	7237	1731/1704	2021/1994
	7000	3118/3091	8220	7737	1898/1871	2188/2161
HI–LO	2700	2133/2106	3920	3437	913/886	1203/1176
	3000	2283/2256	4220	3737	1063/1036	1353/1326
	3300	2433/2406	4520	4037	1213/1186	1503/1476

* Single / Dual Tyre

Upright table S50/55

Mast type	Maximum Fork Height (h3)	Mast Lowered (h1)*	Mast Extended (h4)		Free Lift (h2)	
			with load backrest	without load backrest	with load backrest*	without load backrest*
	mm	mm	mm	mm	mm	mm
Standard	2800	2242/2207	4062	3772	166	166
	3100	2392/2357	4320	4030		
	3300	2492/2457	4520	4230		
	3500	2592/2557	4720	4430		
	3800	2742/2707	5020	4730		
	4300	2992/2957	5520	5230		
	4800	3242/3207	6020	5730		
Triplex	3800	2124/2089	5020	4730	904/869	1194/1159
	4100	2224/2189	5320	5030	1004/969	1294/1259
	4300	2291/2256	5520	5230	1071/1036	1361/1326
	4600	2391/2356	5820	5530	1171/1136	1461/1426
	4800	2458/2423	6020	5730	1238/1203	1528/1493
	5300	2625/2590	6520	6230	1405/1370	1695/1660
	5800	2792/2757	7020	6730	1572/1537	1862/1827
	6300	2959/2924	7520	7230	1739/1704	2029/1994
	6800	3126/3091	8020	7730	1906/1871	2196/2161
HI–LO	2600	2141/2106	3820	3530	921/886	1211/1176
	2900	2291/2256	4120	3830	1071/1036	1361/1326
	3200	2441/2406	4420	4130	1231/1186	1511/1476

* Single / Dual Tyre

Performance may vary + 5 % and - 10 % due to motor and system efficiency tolerance. The performance shown represents nominal values which may be obtained under typical operating conditions of a machine. CLARK products and specifications are subject to change without notice.

PRODUCT DESCRIPTION

CLARK THE FORKLIFT

PRODUCT DESCRIPTION

With the S-Series, CLARK has perfectly developed its already proven, reliable and powerful CLARK forklift trucks. The result is a forklift truck series that is characterised by low operating and maintenance costs as well as a well-designed and ergonomic driver's workplace: An ideal combination that is unparalleled in the market.

Operator Compartment

- Ergonomic operator 's compartment that offers plenty of legroom
- Large unrestricted entrance and exit
- Minimal vibrations
- Non-slip metal step
- Non-slip foot area
- Large grab handle on the driver side of entry makes it easy to climb up and down
- Adjustable steering column allows more leg and foot room
- Small steering wheel diameter (ø=300 mm)
- Hydraulic power steering
- Adjustable seats with mechanical or air- suspension
- Hood mounted hydraulic control by levers or electronic hydraulic control via mini-levers
- Ergonomic positioned drive, inch and brake pedals
- Low front fairing for best visibility
- Very clear visibility through the mast thanks to double primary cylinders on all uprights with free lift
- Cup holder, storage box and document holder on demand with 12 Volt power connection or USB charging port

Smart-Display

- Clear and easy-to-read 5-inch colour display
- Protected against water ingress
- Maintenance indicator and password-protected service access
- Selection of different warning signs (optical / acoustic)

Truck settings for more fuel efficiency

- Automatic engine shut down timer to avoid unwanted fuel consumption by running engine
- Automatic light switch-off if the driver's seat is not in use
- The setting for each shutdown function can be activated on demand and will start after the operator has left the driver seat. The duration of the switch-off delay is adjustable

Engine, Transmission

The CLARK S-Series forklifts with LPG or diesel-powered offer excellent acceleration and performance power. The modern Kubota engines are efficient and at the top end of the performance class.
A protection against overheating is active at any time. The engine is mounted on rubber isolation blocks. In addition, a split-transmission reduces vibrations and noise to a minimum.

Diesel Engine

- Kubota V3800
- Meets the exhaust emission regulations within the EU (Euro emission stage 5)
- Turbocharger with intercooler
- DPF (Diesel Particulate Filter)
- DOC (Diesel Oxidation Catalyst)
- No additional additives required

LPG Engine

- Kubota WG3800
- Meets the exhaust emission regulations within the EU (Euro emission stage 5)
- ECU-controlled map ignition for more torque
- 4-cylinder design with overhead camshafts
- Electronic controlled engine speed

Steering system

- Hydrostatic power steering eliminating steering kick-back
- Robust steering axle with pivotal bearings in mounted rubber steel mounting

Brake system

- Auto engaging electric parking brake with rollback protection on gradients and ramps
- Maintenance free wet disc service brakes
- Power assisted service brake for easier operation with more effect

Hydraulic system

- Full-flow reverse filter, filters the oil to the tank at each reverse flow
- Rough particles are filtered directly via a suction filter, thereby preventing them from entering the oil circuit. This ensures a long service life for all hydraulic components
- Large hydraulic oil tank (47 L) makes sure that there is always enough hydraulic oil available for the highest upright and all type of attachments
- A safety valve provides extra safety and prevents an uncontrolled load lowering at all times

Upright/Mast

- The clear-view uprights are available in Standard-, Hilo- and Triplex-Version
- Very clear visibility
- Double primary cylinders on Hilo- and Triplex-uprights
- Robust 6-roller fork carriage with adjustable side rollers for durability
- The hose roller is mounted separately on the top of the chain roller for best visibility

Additional standard equipment

LED-front headlights, pneumatic tyres, direction indicator lights, combination rear lights with brake lights and white reversing lights (LED). Paintwork in a bright safety colour CLARK HOT YELLOW GREEN ". Driver's compartment and upright in matt black, rims in gloss black

Additional options

- SE tyres
- Heated cabs
- Cabs with air-con (diesel engine only)
- Armrest mounted mini-lever with direction control
- Direction switch mounted on a mechanical hydraulic lever
- Integrated or hook-type side-shifter
- Locking fuel cap (Diesel only)
- Speed limiter
- Rear view camera
- USB charging port
- 12 Volt power connection
- Blue safety light as visual back-up alarm
- Load weight indicator
- CLARK Vertical Mast System (VMS)
  When the function is activated, the tilting process of the mast stops automatically in vertical position.
- Various seats with armrest or side wings
- Quick release couplings
- Acoustic backup alarm
- Vertical exhaust tail pipe

...and much more

Safety

The S-Series is CE-certified and complies with all corresponding European safety standards.

Contact your local CLARK dealer to find the right configuration for your needs.

CLARK Europe GmbH
Dr.-Alfred-Herrhausen-Allee 33
47228 Duisburg / Germany
Tel.: +49 (0)2065 499 13-0
Fax: +49 (0)2065 499 13-290
E-Mail: Info-europe@clarkmheu.com
www.clarkmheu.com

Dealer:

02/2022