B35X-7

Mast type	Maximum Fork Height	Maximum Lowered Height	Fully Extended Height	Free Lift	Rated Load Capacities					
					B35X-7					
					Tilt Angle				Load Capacities	
					Single Pneu.		Single Solid		Single Pneu	Single Solid
			with Load Backrest	with Load Backrest	FWD	BWD	FWD	BWD	LC500mm	LC500mm
	mm	mm	mm	mm	deg	deg	deg	deg	kg	kg
STD	2,720	2,020	3,970	152	6	9	6	9	3,500	3,500
	3,000	2,160	4,250	152	6	9	6	9	3,500	3,500
	3,495	2,410	4,750	152	6	9	6	9	3,500	3,500
	3,655	2,560	4,905	152	6	9	6	9	3,500	3,500
	3,805	2,635	5,055	152	6	9	6	9	3,500	3,500
	4,805	3,135	6,055	152	6	5	6	9	3,125	3,425
FF	2,720	2,020	3,970	820	6	5	6	9	3,500	3,500
	3,000	2,160	4,250	960	6	5	6	9	3,500	3,500
	3,495	2,410	4,745	1,210	6	5	6	9	3,500	3,500
FFT	3,555	1,885	4,805	685	6	9	6	9	3,400	3,400
	3,960	2,020	5,210	820	6	9	6	9	3,400	3,400
	4,380	2,160	5,630	960	6	9	6	9	3,300	3,400
	4,820	2,330	6,070	1,130	6	5	6	9	3,175	3,400
	5,205	2,510	6,455	1,310	6	5	6	9	2,575	3,300
	5,655	2,660	6,905	1,460	6	5	6	5	2,000	3,200

Note: These load capacities are based on the standard chassis without side shifter.

Specification values quoted in this catalog have been rounded.
Products and specifications are subject to improvement and change without notice.
Performance may vary due to operating conditions.
The performance shown represents nominal values obtained under typical operating conditions.

EUB25X7-160205v1EN (February 2016)

Doosan Industrial Vehicle Europe nv
Europark-Noord 36A
9100 Sint-Niklaas
Belgium
Tel.: +32 3 760 09 87
Fax: +32 3 760 09 89
Website : www.doosan-iv.eu

AUTHORIZED DEALER

DOOSAN

www.doosan-iv.eu

7-Series Forklifts

Electric 2.2 to 3.5 ton capacity

Lifting Your Dreams

GENERAL SPECIFICATIONS

CHARACTERISTICS	1	Manufacturer			Doosan	Doosan	Doosan	Doosan	Doosan
	2	Model			B22X-7	B25X-7	B25XL-7	B30X-7	B35X-7
	3	Capacity	at rated load center	kg	2,200	2,500	2,500	3,000	3,500
	4	Load center	distance	mm	500	500	500	500	500
	5	Power type			AC electric	AC electric	AC electric	AC electric	AC electric
	6	Operator type			driver seated	driver seated	driver seated	driver seated	driver seated
	7	Tire type	C=cushion, P=pneumatic, E=Solid		P, E	P, E	P, E	P, E	P, E
	8	Wheels (x=driven)	number, front/rear		x 2/2	x 2/2	x 2/2	x 2/2	x 2/2
DIMENSIONS	9	Maximum fork height	with STD 2-stage mast	mm	3,230	3,230	3,230	3,230	3,000
	10	Free lift		mm	147	147	147	152	152
	11	Fork carriage	ISO class		II	II	II	III	III
	12	Forks	thickness x width x length	mm	40x100x1,050	40x100x1,050	40x100x1,050	45x125x1,050	45x125x1,050
	13		fork spacing (min x max)	mm	272 x 1,035	272 x 1,035	272 x 1,035	286 x 1,044	286 x 1,044
	14	Tilt of mast	forward / backward	deg	6/9	6/9	6/9	6/9	6/9
	15	Overall dimensions	length to forkface	mm	2,329	2,329	2,474	2,480	2,564
	16		overall width	mm	1,245	1,245	1,245	1,245	1,245
	17		mast lowered height	mm	2,160	2,160	2,160	2,160	2,160
	18		mast extended height	mm	3,990	3,990	3,990	3,990	3,760
	19		overhead guard height (Cabin)	mm	2,185	2,185	2,210	2,210	2,210
	20		seat height	mm	1,070	1,070	1,070	1,070	1,070
	21	Outer turning radius		mm	1,950	1,950	2,095	2,095	2,155
		Inner turning radius		mm	348	348	340	340	340
	22	Load moment constant	center of drive axle to fork face	mm	448	448	448	454	454
	23	Right Angle Stacking Aisle Width (with pallets & clearance)	pallet 1,000x1,200 crossways	mm	3,620	3,620	3,766	3,772	3,832
			pallet 800x1,200 lengthways	mm	3,799	3,799	3,944	3,950	4,010
PERFORMANCE	24	Speed	travel / loaded/unloaded	km/h	16/18	16/18	16/18	16/18	16/18
	25		lift / loaded/unloaded	mm/s	500/600	480/600	480/600	420/600	380/600
	26		lowering / loaded/unloaded	mm/s	490/460	490/460	490/460	490/460	500/460
	28	Max. drawbar pull	at 1.6 km/h, loaded/unloaded	kg.f	1,768/1,675	1,768/1,675	1,768/1,675	1,768/1,675	1,768/1,675
	30	Gradeability	at 1.6 km/h, loaded/unloaded	%	27/40	25/38	25/38	22/34	20/31
WEIGHT	32	Total weight	with min. weight of battery	kg	4,419	4,623	4,728	5,068	5,486
	33	Axle load	loaded, front/rear	kg	5,807/810	6,275/848	6,312/935	7,253/837	7,996/1,013
	34		unloaded, front/rear	kg	2,294/2,125	2,284/2,339	2,391/2,337	2,547/2,521	2,532/2,954
CHASSIS	35	Tires	number of front/rear		2/2	2/2	2/2	2/2	2/2
	36		size / front		23x10-12	23x10-12	23x10-12	23x10-12	23x10-12
	37		size / rear		18x7-8	18x7-8	18x7-8	18x7-8	18x7-8
	38	Wheel base	distance	mm	1,589	1,589	1,734	1,734	1,750
	39	Tread width	front	mm	998	998	998	998	998
			rear	mm	998	998	998	998	998
	40	Ground clearance	loaded / at the lowest point	mm	130	130	130	130	130
	41		loaded / at center of wheelbase	mm	140	140	140	140	140
	42	Brakes	service brake		hydraulic	hydraulic	hydraulic	hydraulic	hydraulic
	43		parking brake		auto-electric	auto-electric	auto-electric	auto-electric	auto-electric
POWER TRAIN	45	Battery	type		DIN 43536 A	DIN 43536 A	DIN 43536 A	DIN 43536 A	DIN 43536 A
			voltage	V	80	80	80	80	80
			capacity (5 hours rating) - normal	AH	500	500	600	600	600
			capacity (5 hours rating) - max.	AH	620	620	775	775	775
			min. weight	kg	1,560	1,560	1,870	1,870	1,870
	46	Battery compartment	at chassis sizes (W x L x H)	mm	1,040 x 720 x 805		1,040 x 865 x 805		
	47	Electric motors	drive motor rating at S2 60 minutes	kW	10.0 x 2	10.0 x 2	10.0 x 2	10.0 x 2	10.0 x 2
	48		lifting motor rating at S3 15%	kW	21	21	21	21	21
	54	Control type	drive and hydraulic	type	MOSFET inverter				
	55	Drive axle	brake type	type	ODB				
	57	Relief pressure	system	bar	183	193	193	207	235
			attachment	bar	155	155	155	155	155

Note : Specification values quoted in this specification sheet have been rounded. Performance may vary due to operation conditions.
Products and specifications are subject to improvement and change without prior notices.

DIMENSIONAL DRAWING

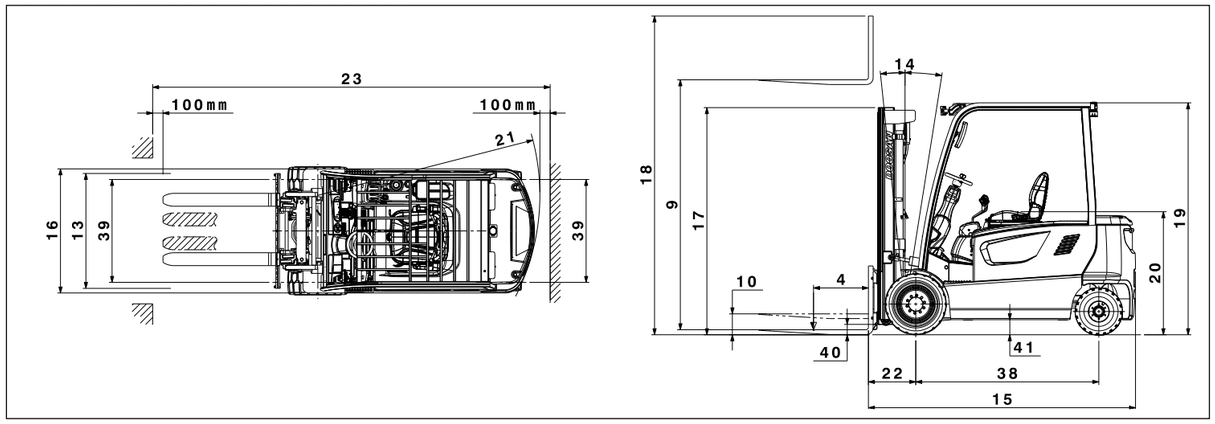

MAST SPECIFICATIONS and RATED CAPACITIES

B22X-7, B25X-7, B25XL-7

Mast type	Maximum Fork Height	Maximum Lowered Height	Fully Extended Height with Load Backrest	Free Lift With Load Backrest	Rated Load Capacities B22X-5, B25X-7, B25XL-7 Tilt Angle Single Pneu. FWD	Single Pneu. BWD	Single Solid FWD	Single Solid BWD	B22X-7 Load Capacities Single Pneu. LC500mm	B22X-7 Single Solid LC500mm	B25X-5, B25XL-7 Load Capacities Single Pneu. LC500mm	B25X-5, B25XL-7 Single Solid LC500mm
	mm	mm	mm	mm	deg	deg	deg	deg	kg	kg	kg	kg
STD	2,950	2,020	4,200	147	6	9	6	9	2,200	2,200	2,500	2,500
	3,230	2,160	4,480	147	6	9	6	9	2,200	2,200	2,500	2,500
	3,500	2,410	4,755	147	6	9	6	9	2,200	2,200	2,500	2,500
	3,800	2,560	5,055	147	6	9	6	9	2,200	2,200	2,500	2,500
	3,950	2,635	5,205	147	6	9	6	9	2,200	2,200	2,500	2,500
	4,350	2,835	5,605	147	6	9	6	9	2,200	2,200	2,500	2,500
	4,960	3,135	6,205	147	6	9	6	9	2,100	2,125	2,425	2,450
FF	2,950	2,020	4,200	815	6	9	6	9	2,200	2,200	2,500	2,500
	3,230	2,160	4,480	955	6	9	6	9	2,200	2,200	2,500	2,500
	3,600	2,410	4,855	1,205	6	9	6	9	2,200	2,200	2,500	2,500
FFT	3,900	1,885	5,155	680	6	9	6	9	2,200	2,200	2,500	2,500
	4,290	2,020	5,560	815	6	9	6	9	2,200	2,200	2,500	2,500
	4,730	2,160	5,980	955	6	9	6	9	2,150	2,175	2,475	2,500
	4,805	2,165	6,055	980	6	9	6	9	2,150	2,175	2,450	2,475
	5,560	2,510	6,805	1,305	6	5	6	9	2,000	2,025	2,275	2,325
	6,010	2,660	7,255	1,455	6	5	6	9	1,875	1,950	1,700	2,250

B30X-7

Mast type	Maximum Fork Height	Maximum Lowered Height	Fully Extended Height with Load Backrest	Free Lift with Load Backrest	Rated Load Capacities B30X-7 Tilt Angle Single Pneu. FWD	Single Pneu. BWD	Single Solid FWD	Single Solid BWD	Load Capacities Single Pneu LC500mm	Load Capacities Single Solid LC500mm
	mm	mm	mm	mm	deg	deg	deg	deg	kg	kg
STD	2,950	2,020	4,200	152	6	9	6	9	3,000	3,000
	3,230	2,160	4,480	152	6	9	6	9	3,000	3,000
	3,500	2,410	4,755	152	6	9	6	9	3,000	3,000
	3,800	2,560	5,055	152	6	9	6	9	3,000	3,000
	3,950	2,635	5,205	152	6	9	6	9	3,000	3,000
	4,350	2,835	5,605	152	6	9	6	9	2,950	2,975
	4,960	3,135	6,205	152	6	5	6	9	2,800	2,825
FF	2,950	2,020	4,200	820	6	9	6	9	3,000	3,000
	3,230	2,160	4,480	960	6	9	6	9	3,000	3,000
	3,600	2,410	4,855	1,210	6	9	6	9	3,000	3,000
FFT	3,900	1,885	5,155	685	6	9	6	9	2,900	2,900
	4,290	2,020	5,560	820	6	9	6	9	2,900	2,900
	4,730	2,160	5,980	960	6	9	6	9	2,850	2,875
	4,805	2,165	6,055	985	6	9	6	9	2,850	2,875
	5,560	2,510	6,805	1,310	6	5	6	9	2,300	2,700
	6,010	2,660	7,255	1,460	6	5	6	5	1,775	2,600