BADU®Block

Installation/Operating Manual

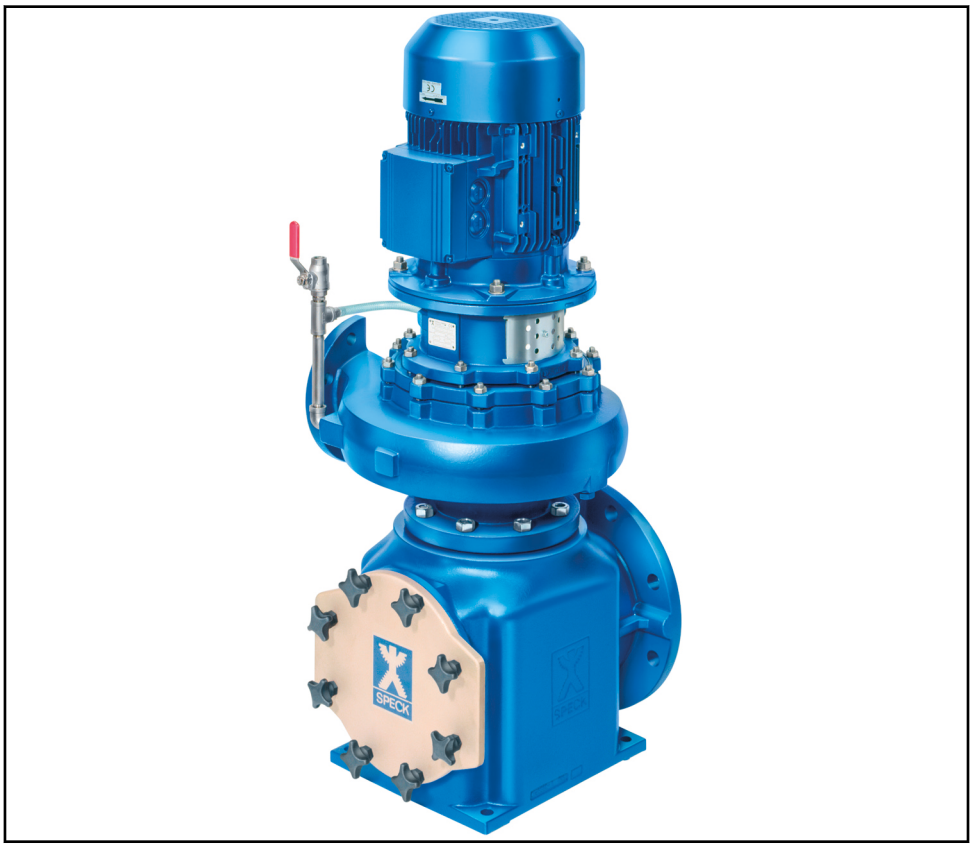

speck pumpen
VERKAUFSGESELLSCHAFT GmbH

Legal information/Copyright

Installation/Operating Manual BADU®Block

Original operating manual

All rights reserved. The contents provided herein must neither be distributed, copied, reproduced, edited or processed for any other purpose, nor otherwise transmitted, published or made available to a third party without the manufacturer's express written consent.

Subject to technical modification without prior notice.

© Speck Pumpen Verkaufsgesellschaft GmbH, Neunkirchen a. Sand 07.10.2014

Contents

Glossary 5

1 General 6
1.1 Principles 6
1.2 Installation of partly completed machinery 6
1.3 Target group 6
1.4 Other applicable documents 6
1.5 Symbols 6

2 Safety 7
2.1 Key to safety symbols/markings 7
2.2 General 7
2.3 Intended use 7
2.4 Personnel qualification and training 8
2.5 Consequences and risks caused by non-compliance with this manual 8
2.6 Safety awareness 8
2.7 Safety information for the operator/user 9
2.8 Safety information for maintenance, inspection and installation work 9
2.9 Unauthorised modes of operation 9
2.10 Instructions for explosion protection 9

3 Transport/Temporary Storage/Disposal 12
3.1 Checking the condition upon delivery 12
3.2 Transport 12
3.3 Storage/preservation 13
3.4 Return to supplier 13
3.5 Disposal 14

4 Description of the Pump (Set) 15
4.1 General description 15
4.2 Designation 15
4.3 Name plate 15
4.4 Design details 15
4.5 Configuration and function 16
4.6 Noise characteristics 17
4.7 Scope of supply 17
4.8 Dimensions 17

5 Installation at Site 18
5.1 Safety regulations 18
5.2 Checks to be carried out prior to installation 18
5.3 Installing the pump set 18
5.4 Piping 19

5.5 Casing/insulation 20
5.6 Electrical connection 20
5.7 Checking the direction of rotation 21

6 Commissioning/Start-up/Shutdown 23
6.1 Commissioning/start-up 23
6.2 Operating limits 25
6.3 Shutdown/storage/preservation 27
6.4 Returning to service 28

7 Servicing/Maintenance 29
7.1 Safety regulations 29
7.2 Servicing/inspection 30
7.3 Drainage/cleaning 33
7.4 Dismantling the pump set 33
7.5 Reassembling the pump set 35
7.6 Tightening torques 40
7.7 Spare parts stock 41

8 Trouble-shooting 42

9 Related Documents 44
9.1 General assembly drawings 44

10 EC Declaration of Conformity 48

11 Certificate of Decontamination 49

Index 50

Glossary

Back pull-out unit

Pump without pump casing; partly completed machinery

Certificate of decontamination

A certificate of decontamination is enclosed by the customer when returning the product to the manufacturer to certify that the product has been properly drained to eliminate any environmental and health hazards arising from components in contact with the fluid handled.

Discharge line

The line which is connected to the discharge nozzle

Hydraulic system

The part of the pump in which the kinetic energy is converted into pressure energy

Pool of pumps

Pumps which are purchased and stored independently of their later use

Pump

Machine without drive, additional components or accessories

Pump set

Complete pump set consisting of pump, drive, additional components and accessories

Suction lift line/suction head line

The line which is connected to the suction nozzle

1 General

1.1 Principles

This operating manual is supplied as an integral part of the type series and variants indicated on the front cover. The manual describes the proper and safe use of this equipment in all phases of operation.

The name plate indicates the type series/size, the main operating data and the order number. The series number uniquely identifies the pump (set) and serves as identification for all further business processes.

In the event of damage, immediately contact Speck Pumpen to maintain the right to claim under warranty.

Noise characteristics (⇨ Section 4.6 Page 17)

1.2 Installation of partly completed machinery

To install partly completed machinery supplied by Speck Pumpen refer to the sub-sections under Servicing/Maintenance.

1.3 Target group

This operating manual is aimed at the target group of trained and qualified specialist technical personnel. (⇨ Section 2.4 Page 8)

1.4 Other applicable documents

Table 1: Overview of other applicable documents

Document	Contents
Outline drawing	Description of mating and installation dimensions for the pump (set)
Hydraulic characteristic curve	Characteristic curves showing head, NPSH required, efficiency and power input
Sub-supplier product literature	Operating manuals and other product literature describing accessories and integrated machinery components

For accessories and/or integrated machinery components, observe the relevant manufacturer's product literature.

1.5 Symbols

Table 2: Symbols used in this manual

Symbol	Description
✓	Conditions which need to be fulfilled before proceeding with the step-by-step instructions
▷	Safety instructions
⇨	Result of an action
⇨	Cross-references
1. 2.	Step-by-step instructions
	Note Recommendations and important information on how to handle the product

2 Safety

DANGER

All the information contained in this section refers to hazardous situations.

2.1 Key to safety symbols/markings

Table 3: Definition of safety symbols/markings

Symbol	Description
DANGER	**DANGER** This signal word indicates a high-risk hazard which, if not avoided, will result in death or serious injury.
WARNING	**WARNING** This signal word indicates a medium-risk hazard which, if not avoided, could result in death or serious injury.
CAUTION	**CAUTION** This signal word indicates a hazard which, if not avoided, could result in damage to the machine and its functions.
	Explosion protection This symbol identifies information about avoiding explosions in potentially explosive atmospheres in accordance with EC Directive 94/9/EC (ATEX).
	General hazard In conjunction with one of the signal words this symbol indicates a hazard which will or could result in death or serious injury.
	Electrical hazard In conjunction with one of the signal words this symbol indicates a hazard involving electrical voltage and identifies information about protection against electrical voltage.
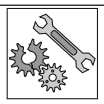	**Machine damage** In conjunction with the signal word CAUTION this symbol indicates a hazard for the machine and its functions.

2.2 General

This manual contains general installation, operating and maintenance instructions that must be observed to ensure safe pump operation and prevent personal injury and damage to property.

The safety information in all sections of this manual must be complied with.

This manual must be read and completely understood by the specialist personnel/ operators responsible prior to installation and commissioning.

The contents of this manual must be available to the specialist personnel at the site at all times.

Information attached directly to the pump must always be complied with and be kept in a perfectly legible condition at all times. This applies to, for example:

- Arrow indicating the direction of rotation
- Markings for connections
- Name plate

The operator is responsible for ensuring compliance with all local regulations not taken into account in this manual.

2.3 Intended use

The pump (set) must only be operated within the operating limits described in the other applicable documents.

- Only operate pumps/pump sets which are in perfect technical condition.
- Do not operate the pump (set) in partially assembled condition.
- Only use the pump to handle the fluids described in the order or product literature of the pump model or variant.

- Never operate the pump without the fluid to be handled.
- Observe the information on minimum flow rates specified in the product literature (to prevent overheating, bearing damage, etc).
- Observe the information on maximum flow rates specified in the product literature (to prevent overheating, mechanical seal damage, cavitation damage, bearing damage, etc).
- Do not throttle the flow rate on the suction side of the pump (to prevent cavitation damage).
- Consult the manufacturer about any other modes of operation not described in the product literature.

Prevention of foreseeable misuse

- Never open the discharge-side shut-off elements further than permitted.
  - The maximum flow rate specified in the product literature would be exceeded.
  - Risk of cavitation damage.
- Never exceed the permissible operating limits (pressure, temperature, etc.) specified in the product literature.
- Observe all safety information and instructions in this manual.

2.4 Personnel qualification and training

All personnel involved must be fully qualified to transport, install, operate, maintain and inspect the machinery this manual refers to.

The responsibilities, competence and supervision of all personnel involved in transport, installation, operation, maintenance and inspection must be clearly defined by the operator.

Deficits in knowledge must be rectified by means of training and instruction provided by sufficiently trained specialist personnel. If required, the operator can commission the manufacturer/supplier to train the personnel.

Training on the pump (set) must always be supervised by technical specialist personnel.

2.5 Consequences and risks caused by non-compliance with this manual

- Non-compliance with this operating manual will lead to forfeiture of warranty cover and of any and all rights to claims for damages.
- Non-compliance can, for example, have the following consequences:
  - Hazards to persons due to electrical, thermal, mechanical and chemical effects and explosions
  - Failure of important product functions
  - Failure of prescribed maintenance and servicing practices
  - Hazard to the environment due to leakage of hazardous substances

2.6 Safety awareness

In addition to the safety information contained in this manual and the intended use, the following safety regulations shall be complied with:

- Accident prevention, health and safety regulations
- Explosion protection regulations
- Safety regulations for handling hazardous substances
- Applicable standards and laws

2.7 Safety information for the operator/user

- The operator shall fit contact guards for hot, cold and moving parts and check that the guards function properly.
- Do not remove any contact guards during operation.
- Provide the personnel with protective equipment and make sure it is used.
- Contain leakages (e.g. at the shaft seal) of hazardous fluids handled (e.g. explosive, toxic, hot) so as to avoid any danger to persons and the environment. Adhere to all relevant laws.
- Eliminate all electrical hazards. (In this respect refer to the applicable national safety regulations and/or regulations issued by the local energy supply companies.)
- If shutting down the pump does not increase potential risk, fit an emergency-stop control device in the immediate vicinity of the pump (set) during pump set installation.

2.8 Safety information for maintenance, inspection and installation work

- Modifications or alterations of the pump are only permitted with the manufacturer's prior consent.
- Use only original spare parts or parts authorised by the manufacturer. The use of other parts can invalidate any liability of the manufacturer for resulting damage.
- The operator ensures that all maintenance, inspection and installation work is performed by authorised, qualified specialist personnel who are thoroughly familiar with the manual.
- Only carry out work on the pump (set) during standstill of the pump.
- The pump casing must have cooled down to ambient temperature.
- Pump pressure must have been released and the pump must have been drained.
- When taking the pump set out of service always adhere to the procedure described in the manual. (⇨ Section 6.1.5 Page 25) (⇨ Section 6.3 Page 27)
- Decontaminate pumps which handle fluids posing a health hazard.
- As soon as the work has been completed, re-install and/or re-activate any safety-relevant and protective devices. Before returning the product to service, observe all instructions on commissioning.

2.9 Unauthorised modes of operation

Never operate the pump (set) outside the limits stated in the order documentation and in this manual.

The warranty relating to the operating reliability and safety of the supplied pump (set) is only valid if the equipment is used in accordance with its intended use. (⇨ Section 2.3 Page 7)

2.10 Instructions for explosion protection

DANGER

Always observe the information on explosion protection given in this section when operating the pump in potentially explosive atmospheres.

Only pumps/pump sets marked as explosion-proof **and** identified as such in the order may be used in potentially explosive atmospheres.

Special conditions apply to the operation of explosion-proof pump sets to EC Directive 94/9/EC (ATEX).
Especially adhere to the sections in this manual marked with the Ex symbol and the following sections (⇨ Section 2.10.1 Page 10) to (⇨ Section 2.10.4 Page 11) .
The explosion-proof status of the pump set is only assured if the pump set is used in accordance with its intended use.
Never operate the pump set outside the limits stated in the order documentation and on the name plate.
Prevent impermissible modes of operation at all times.

2.10.1 Marking

Pump

The marking on the pump refers to the pump part only.
Example of such marking: II 2 G c TX
Refer to the Temperature Limits table for the temperatures permitted for the individual pump variants. (⇨ Section 2.10.2 Page 10)

Shaft coupling

An EC manufacturer's declaration is required for the shaft coupling; the shaft coupling must be marked accordingly.

Motor

The motor has its own marking. The marking is maintained on the condition that the temperatures the pump causes to develop at the motor flange and motor shaft are permitted by the motor manufacturer.
The motors used by Speck Pumpen on pumps with ATEX certification meet this condition.

2.10.2 Temperature limits

In normal pump operation, the highest temperatures are to be expected on the surface of the pump casing and at the shaft seal.
The surface temperature at the pump casing corresponds to the temperature of the fluid handled. If the pump is heated in addition, the operator of the system is responsible for observing the specified temperature class and fluid temperature (operating temperature).
The table below lists the temperature classes and the resulting theoretical temperature limits of the fluid handled (a possible temperature rise in the shaft seal area has already been taken into account).

The temperature class specifies the maximum permissible temperature at the surface of the pump set during operation. For the permissible operating temperature of the pump in question refer to the order documentation.

Table 4: Temperature limits

Temperature class as per EN 13463-1	Max. permissible fluid temperature
T1	Temperature limit of the pump
T2	280 °C
T3	185 °C
T4	120 °C
T5	85 °C
T6	Only after consultation with the manufacturer

If the pump is to be operated at a higher temperature or if the pump is part of a pool of pumps, contact Speck Pumpen for the maximum permissible operating temperature.

Motor supplied by the operator

If a pump is supplied without motor (as part of a pool of pumps), the motor specified in the order documentation of the pump must meet the following conditions:

- The permissible temperature limits at the motor flange and motor shaft must be higher than the temperatures generated by the pump.
- Contact the manufacturer for the actual pump temperatures.

2.10.3 Monitoring equipment

The pump (set) must only be operated within the limits specified in the order documentation and on the name plate.
If the system operator cannot warrant compliance with these operating limits, appropriate monitoring devices must be used.
Check whether monitoring equipment is required to ensure that the pump set functions properly.

Contact Speck Pumpen for further information on monitoring equipment.

2.10.4 Operating limits

The minimum flows indicated in (⇨ Section 6.2.3.1 Page 26) refer to water and water-like fluids handled. Longer operating periods with these fluids and at the flow rates indicated will not cause an additional increase in the temperatures at the pump surface. However, if the physical properties of the fluids handled are different from water, it is essential to check whether an additional heat build-up may occur and if the minimum flow rate must therefore be increased. The calculation formula in (⇨ Section 6.2.3.1 Page 26) can be used to check whether additional heat build-up may lead to a dangerous temperature increase at the pump surface.

3 Transport/Temporary Storage/Disposal

3.1 Checking the condition upon delivery

1. On transfer of goods, check each packaging unit for damage.
2. In the event of in-transit damage, assess the exact damage, document it and notify Speck Pumpen or the supplying dealer (as applicable) and the insurer about the damage in writing immediately.

3.2 Transport

⚠ DANGER

The pump (set) could slip out of the suspension arrangement
Danger to life from falling parts!

- ▹ Always transport the pump (set) in the specified position.
- ▹ Never attach the suspension arrangement to the free shaft end or the motor eyebolt.
- ▹ Give due attention to the weight data and the centre of gravity.
- ▹ Observe the applicable local health and safety regulations.
- ▹ Use suitable, permitted lifting accessories, e.g. self-tightening lifting tongs.

CAUTION

Incorrect transport of the pump
Damage to the shaft seal!

- ▹ For transport, lock the pump shaft with a suitable transport lock to prevent any movement of the shaft.

When transporting the pump without motor, shaft 210 must be locked.

1. Remove cover plates 68-3 from drive lantern 341.
2. Insert lock washers 931.95 into the shaft groove.
3. Tighten bolts 901.50.

To transport the pump/pump set suspend it from the lifting tackle as shown.

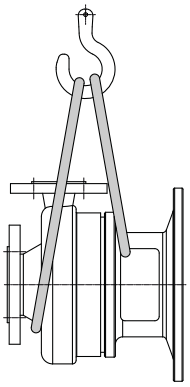

Fig. 1: Transporting the pump

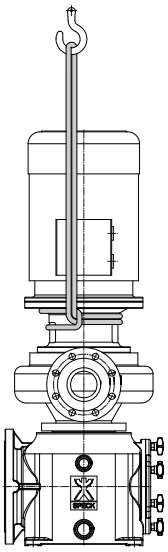

Fig. 2: Transporting the pump set

3.3 Storage/preservation

If commissioning is to take place some time after delivery, we recommend that the following measures be taken for pump (set) storage.

	CAUTION
	Damage during storage by humidity, dirt, or vermin Corrosion/contamination of the pump (set)! ▹ For outdoor storage cover the packed or unpacked pump (set) and accessories with waterproof material.

	CAUTION
	Wet, contaminated or damaged openings and connections Leakage or damage to the pump set! ▹ Only remove caps/covers from the openings of the pump set at the time of installation.

Store the pump (set) in a dry, protected room where the atmospheric humidity is as constant as possible.

Manually rotate the shaft by 1/2 turn at least once a week, e.g. via the motor fan.

If properly stored indoors, the equipment is protected for a maximum of 12 months. New pumps/pump sets are supplied by our factory duly prepared for storage.

For storing a pump (set) which has already been operated, observe the instructions in (⇨ Section 6.3.1 Page 27) .

3.4 Return to supplier

1. Drain the pump as per operating instructions.
2. Always flush and clean the pump, particularly if it has been used for handling noxious, explosive, hot or other hazardous fluids.
3. If the pump set has handled fluids whose residues could lead to corrosion in the presence of atmospheric humidity or could ignite upon contact with oxygen, the pump set must also be neutralised, and anhydrous inert gas must be blown through the pump to ensure drying.
4. Always complete and enclose a certificate of decontamination when returning the pump (set).
   Always indicate any safety and decontamination measures taken. (⇨ Section 11 Page 49)

3.5 Disposal

	⚠ **WARNING** **Fluids, consumables and supplies which are hot and/or pose a health hazard** Hazard to persons and the environment! ▹ Collect and properly dispose of flushing fluid and any residues of the fluid handled. ▹ Wear safety clothing and a protective mask, if required. ▹ Observe all legal regulations on the disposal of fluids posing a health hazard.

1. Dismantle the pump (set).
   Collect greases and other lubricants during dismantling.
2. Separate and sort the pump materials, e.g. by:
   - Metals
   - Plastics
   - Electronic waste
   - Greases and other lubricants
3. Dispose of materials in accordance with local regulations or in another controlled manner.

4 Description of the Pump (Set)

4.1 General description

BADU®Block centrifugal pumps are non-priming, single-stage volute casing pumps in close-coupled design for vertical installation, sealed by a mechanical seal.

The close-coupled pump and the pre-filter casing are flanged together. They from a close-coupled unit.

Pump for handling clean or aggressive fluids which are neither chemically nor mechanically aggressive to the pump materials.

4.2 Designation

Example: BADU®Block 32/160 W12

Table 5: Key to the designation

Code	Description
BADU®Block	Type series
32	Nominal discharge nozzle diameter [mm]
160	Nominal impeller diameter [mm]
W12	Material variant, e.g. W12

4.3 Name plate

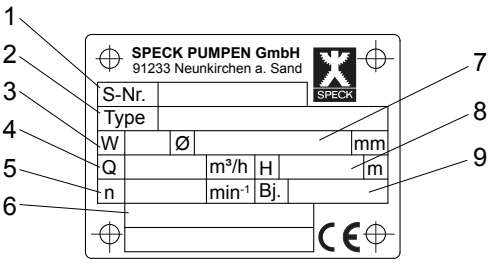

Fig. 3: Name plate (example) Normpumpe

1	Series number	2	Type series, size
3	Material variant	4	Flow rate
5	Speed	6	Other
7	Impeller diameter	8	Head
9	Year of construction		

4.4 Design details

Design

- Volute casing pump with pre-filter casing
- Vertical installation
- Single-stage
- Ratings to EN 733
- Complies with the 2009/125/EC Directive

Pump casing

- Radially split volute casing
- Volute casing of some pumps with integrally cast pump feet
- Replaceable casing wear rings

Impeller type

- Closed radial impeller with multiply curved vanes

Shaft seal

- Single mechanical seals to EN 12756
- Shaft equipped with replaceable shaft protecting sleeve in the shaft seal area

Drive

Table 6: General motor data

Characteristic	Description
Design	Surface-cooled three-phase, low-voltage motor to IEC
Winding	**50 Hz** Up to 2.2 kW: 230 V/ 400 V 3 kW and higher: 400 V/ 690 V **60 Hz** Up to 2.6 kW: 460 V 3.6 kW and higher: 460 V
Type of construction	IM V1
Enclosure	IP55
Mode of operation	Continuous operation S1
Thermal class	F with temperature sensors: 3 thermistors

4.5 Configuration and function

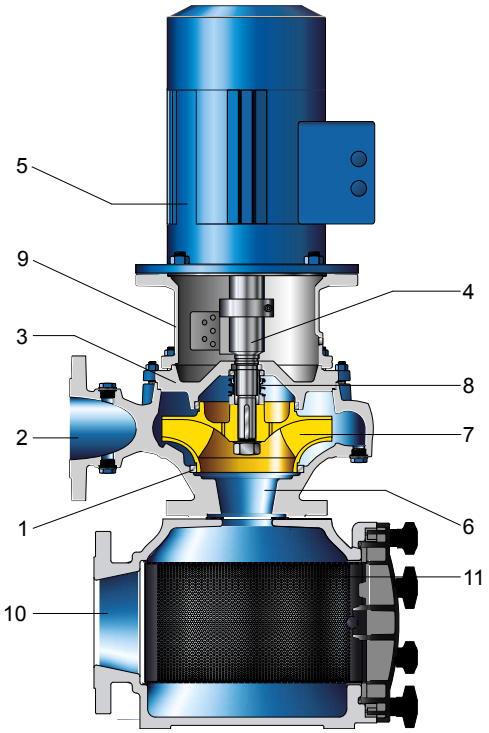

Fig. 4: Sectional drawing

1	Clearance gap	2	Discharge nozzle of the pump casing
3	Casing cover	4	Shaft
5	Motor housing	6	Suction nozzle of the pump casing
7	Impeller	8	Shaft seal
9	Drive lantern	10	Pre-filter casing
11	Suction strainer		

Design The pump is designed with an axial fluid inlet and a radial outlet. The hydraulic system is rigidly connected to the motor via a stub shaft.

Function The pump is protected from coarse particles by the pre-filter casing (10). The generously dimensioned suction strainer (11) with its small mesh size provides a high degree of filtration and enables long cleaning intervals. After passing through the pre-filter casing, the fluid enters the pump via the suction nozzle (6) and is accelerated outward by the rotating impeller (7). In the flow passage of the pump casing the kinetic energy of the fluid is converted into pressure energy. The fluid is pumped to the discharge nozzle (2), where it leaves the pump. The clearance gap (1) prevents any fluid from flowing back from the casing to the suction nozzle. At the rear side of the impeller, the shaft (4) enters the casing via the casing cover (3). The shaft passage through the cover is sealed to atmosphere with a dynamic shaft seal (8). The shaft runs in rolling element bearings, which are supported by a motor housing (5) linked with the pump casing and/or casing cover (3) via the drive lantern (9).

Sealing The pump is sealed by a standardised mechanical seal.

4.6 Noise characteristics

Table 7: Surface sound pressure level L_{pA} [1)]

Rated power input P_N [kW]	Pump set	
	1450 rpm [dB]	1750 rpm [dB]
0,25	53	54
0,37	54	55
0,55	55	56
0,75	56	57
1,1	57	58
1,5	58	59
2,2	59	60
3	60	61
4	61	62
5,5	62	63
7,5	64	65
11	65	66
15	67	68
18,5	68	69
22	69	70
30	70	71
37	71	72
45	73	74

4.7 Scope of supply

Depending on the model, the following items are included in the scope of supply:

- Pump with pre-filter casing

Drive
- Surface-cooled IEC three-phase motor

Contact guard
- Cover plates on drive lantern to EN 294

4.8 Dimensions

For dimensions refer to the outline drawing of the pump (set).

1) Spatial average; as per ISO 3744 and EN 12639; valid for pump operation in the Q/Qopt = 0.80 - 1.1 range and for non-cavitating operation. If noise levels are to be warranted: add +3 dB for measuring and constructional tolerance.

5 Installation at Site

5.1 Safety regulations

	DANGER
	Improper installation in potentially explosive atmospheres Explosion hazard! Damage to the pump set! ▹ Comply with the applicable local explosion protection regulations. ▹ Observe the information in the order documentation and on the name plates of pump and motor.

5.2 Checks to be carried out prior to installation

Place of installation

	WARNING
	Installation on mounting surfaces which are unsecured and cannot support the load Personal injury and damage to property! ▹ Use a concrete of compressive strength class C12/15 which meets the requirements of exposure class X0 to EN 206-1. ▹ The mounting surface must have set and must be completely horizontal and even. ▹ Observe the weights indicated.

Check the structural requirements.
All structural work required must have been prepared in accordance with the dimensions stated in the outline drawing.

A floor drain is required.

Consider the following criteria for the floor drain dimensions:

- Size of the swimming pool
- Circulation flow rate

5.3 Installing the pump set

	CAUTION
	Ingress of leakage into the motor Damage to the pump! ▹ Never install the pump set with the "motor below".

Installation on a foundation

✓ The foundation has the required strength and characteristics.

✓ The foundation has been prepared in accordance with the dimensions given in the outline drawing.

1. Position the pump set on the foundation and fasten it.
2. Place a spirit level on the discharge nozzle to align the pump set.

5.4 Piping

5.4.1 Connecting the piping

DANGER

Excessive loads acting on the pump nozzles
Danger to life from leakage of hot, toxic, corrosive or flammable fluids!

- ▹ Do not use the pump as an anchorage point for the piping.
- ▹ Anchor the pipelines in close proximity to the pump and connect them without transmitting any stresses or strains.
- ▹ Take appropriate measures to compensate thermal expansion of the piping.

CAUTION

Incorrect earthing during welding work on the piping
Destruction of rolling element bearings (pitting effect)!

- ▹ Never earth the electric welding equipment on the pump.
- ▹ Prevent current flowing through the rolling element bearings.

NOTE

It is recommended to install check and shut-off elements in the system, depending on the type of plant and pump. However, such elements must not obstruct proper drainage or hinder disassembly of the pump.

- ✓ The suction lift line has been laid with a rising slope, the suction head line with a downward slope towards the pump.
- ✓ A flow stabilisation section having a length equivalent to at least twice the inside diameter of the suction flange has been provided upstream of the suction flange.
- ✓ The nominal diameters of the pipelines are equal to or greater than the nominal diameters of the pump nozzles.
  To prevent friction losses in the piping as much as possible, do not exceed the maximum flow velocities of 1.5 m/s in the suction/inlet lines and 2.5 m/s in the discharge lines.
- ✓ Adapters to larger nominal diameters are designed with a diffuser angle of approx. 8° to avoid excessive pressure losses.
- ✓ The pipelines have been anchored in close proximity to the pump and connected without transmitting any stresses or strains.

1. Thoroughly clean, flush and blow through all vessels, pipelines and connections (especially of new installations).
2. Before installing the pump in the piping, remove the flange covers on the suction and discharge nozzles of the pump.
3. Check that the inside of the pump is free from any foreign objects. Remove any foreign objects.
4. Connect the pump nozzles to the piping.

CAUTION

Aggressive flushing and pickling agents
Damage to the pump!

- ▹ Match the cleaning operation mode and duration for flushing and pickling service to the casing and seal materials used.

5.4.2 Permissible forces and moments at the pump nozzles

No piping-induced forces and moments (from warped pipelines or thermal expansion, for example) must act on the pump.

5.5 Casing/insulation

⚠ DANGER

Explosive atmosphere forming due to insufficient venting
Explosion hazard!

- ▹ Make sure the space between the casing cover/discharge cover and the motor flange is sufficiently vented.
- ▹ Do not cover the perforated holes of the contact guards at the drive lantern (e.g. by insulation).

⚠ WARNING

The volute casing and casing/discharge cover take on the same temperature as the fluid handled
Risk of burns!

- ▹ Insulate the volute casing.
- ▹ Fit protective equipment.

CAUTION

Heat build-up inside the drive lantern
Damage to the bearing!

- ▹ Never insulate the casing cover and the drive lantern.

5.6 Electrical connection

⚠ DANGER

Incorrect electrical installation
Explosion hazard!

- ▹ For electrical installation, also observe the requirements of IEC 60079-14.
- ▹ Always use a motor protection switch for explosion-proof motors.

⚠ DANGER

Electrical connection work by unqualified personnel
Danger of death from electric shock!

- ▹ Always have any work on the connection to the power supply performed by a trained electrician.
- ▹ Observe regulations IEC 60364 and, for explosion-proof models, EN 60079.

⚠ WARNING

Incorrect connection to the mains
Damage to the mains network, short circuit!

- ▹ Observe the technical specifications of the local energy supply companies.

1. Check the available mains voltage against the data on the motor name plate.
2. Select an appropriate start-up method.

NOTE

A motor protection device is recommended.

5.6.1 Setting the time relay

CAUTION

Switchover between star and delta on three-phase motors with star-delta starting takes too long.
Damage to the pump (set)!

- Keep switch-over intervals between star and delta as short as possible.

Table 8: Time relay settings for star-delta starting:

Motor rating	Y time to be set
≤ 30 kW	< 3 s
> 30 kW	< 5 s

5.6.2 Earthing

DANGER

Electrostatic charging
Explosion hazard!
Fire hazard!
Damage to the pump set!

- Connect the PE conductor to the earthing terminal provided.

5.6.3 Connecting the motor

NOTE

In compliance with IEC 60034-8, three-phase motors are always wired for clockwise rotation (looking at the motor shaft stub).
The pump's direction of rotation is indicated by an arrow on the pump.

1. Match the motor's direction of rotation to that of the pump.
2. Observe the manufacturer's product literature supplied with the motor.

5.7 Checking the direction of rotation

DANGER

Temperature increases resulting from contact between rotating and stationary components
Explosion hazard!
Damage to the pump set!

- Never check the direction of rotation by starting up the unfilled pump.

WARNING

Hands inside the pump casing
Risk of injuries, damage to the pump!

- Always disconnect the pump set from the power supply and secure it against unintentional start-up before inserting your hands or other objects into the pump.

	CAUTION **Drive and pump running in the wrong direction of rotation** Damage to the pump! ▹ Refer to the arrow indicating the direction of rotation on the pump. ▹ Check the direction of rotation. If required, check the electrical connection and correct the direction of rotation.

The correct direction of rotation of the motor and pump is clockwise (seen from the drive end).

1. Start the motor and stop it again immediately to determine the motor's direction of rotation.
2. Check the direction of rotation.
   The motor's direction of rotation must match the arrow indicating the direction of rotation on the pump.
3. If the motor runs in the wrong direction of rotation, check the electrical connection of the motor and the control system, if applicable.

6 Commissioning/Start-up/Shutdown

6.1 Commissioning/start-up

6.1.1 Prerequisites for commissioning/start-up

Before commissioning/starting up the pump set, make sure that the following conditions are met:

- The pump set has been properly connected to the electric power supply and is equipped with all protection devices.
- The pump has been primed with the fluid to be handled. The pump has been vented.
- The direction of rotation has been checked.
- All auxiliary connections required are connected and operational.
- The lubricants have been checked.
- After prolonged shutdown of the pump (set), the activities required for returning the pump (set) to service have been carried out. (⇨ Section 6.4 Page 28)
- The lock washers, if any, have been removed from the shaft groove.
- The shaft can be easily rotated by hand.

6.1.2 Priming and venting the pump

⚠ DANGER

Risk of potentially explosive atmosphere inside the pump
Explosion hazard!

▹ Before starting up the pump, vent the suction line and the pump and prime them with the fluid to be handled.

CAUTION

Increased wear due to dry running
Damage to the pump set!

▹ Never operate the pump set without liquid fill.

▹ Never close the shut-off element in the suction line and/or supply line during pump operation.

1. Vent the pump and suction line and prime both with the fluid to be handled. An Rp 3/8 " ball valve (743) is provided for complete venting of the mechanical seal chamber. The mechanical seal chamber must be vented prior to commissioning as well as every time the suction strainer has been cleaned.
2. Fully open the shut-off element in the suction line.
3. Fully open all auxiliary feed lines (barrier fluid, flushing liquid, etc.), if any.

NOTE

For design-inherent reasons some unfilled volume in the hydraulic system cannot be excluded after the pump has been primed for commissioning/start-up. However, once the motor is started up the pumping effect will immediately fill this volume with the fluid handled.

6.1.3 Start-up

DANGER

Non-compliance with the permissible pressure and temperature limits if the pump is operated with the suction and/or discharge line closed.
Explosion hazard!
Leakage of hot or toxic fluids!

- Never operate the pump with the shut-off elements in the suction line and/or discharge line closed.
- Only start up the pump set with the discharge-side shut-off element slightly or fully open.

DANGER

Excessive temperatures due to dry running or excessive gas content in the fluid handled
Explosion hazard!
Damage to the pump set!

- Never operate the pump set without liquid fill.
- Prime the pump as per operating instructions.
- Always operate the pump within the permissible operating range.

CAUTION

Abnormal noises, vibrations, temperatures or leakage
Damage to the pump!

- Switch off the pump (set) immediately.
- Eliminate the causes before returning the pump set to service.

✓ The system piping has been cleaned.
✓ Pump, suction line and mechanical seal chamber have been vented and primed with the fluid to be pumped.
✓ The lines for priming and venting have been closed.

CAUTION

Start-up against open discharge line
Motor overload!

- Make sure the motor has sufficient power reserves.
- Use a soft starter.
- Use speed control.

1. Fully open the shut-off element in the suction head/suction lift line.
2. Close or slightly open the shut-off element in the discharge line.
3. Start up the motor.
4. Immediately after the pump has reached full rotational speed, slowly open the shut-off element in the discharge line and adjust it to comply with the duty point.

6.1.4 Checking the shaft seal

Mechanical seal

The mechanical seal only leaks slightly or invisibly (as vapour) during operation. Mechanical seals are maintenance-free.

6.1.5 Shutdown

CAUTION

Heat build-up inside the pump
Damage to the shaft seal!

- ▹ Depending on the type of installation, the pump set requires sufficient after-run time – with the heat source switched off – until the fluid handled has cooled down.

✓ The shut-off element in the suction line is and remains open.

1. Close the shut-off element in the discharge line.
2. Switch off the motor and make sure the pump set runs down smoothly to a standstill.

NOTE

If the discharge line is equipped with a check valve, the shut-off element in the discharge line may remain open, provided the site's requirements and regulations are taken into account and observed.

For prolonged shutdown periods:

1. Close the shut-off element in the suction line.
2. Close the auxiliary connections.
   If the fluid handled is fed in under vacuum, also supply the shaft seal with barrier fluid during standstill.

CAUTION

Risk of freezing during prolonged pump shutdown periods
Damage to the pump!

- ▹ Drain the pump and the cooling/heating chambers (if any) or otherwise protect them against freezing.

6.2 Operating limits

⚠ DANGER

Non-compliance with operating limits for pressure, temperature, fluid handled and speed
Explosion hazard!
Leakage of hot or toxic fluid handled!

- ▹ Comply with the order documentation indicated in the data sheet.
- ▹ Never use the pump to handle fluids it is not designed for.
- ▹ Avoid prolonged operation against a closed shut-off element.
- ▹ Never operate the pump at temperatures, pressures or speeds exceeding those specified in the order documentation or on the name plate unless the written consent of the manufacturer has been obtained.
- ▹ In the case of variants with a filter cover (160) made of acrylic glass, the pressure in the filter housing must not exceed 2.5 bar.

For designs with a filter cover (160) made of acrylic glass, installing a check valve is generally recommended to prevent damage caused by pressure surges.

6.2.1 Ambient temperature

CAUTION

Operation outside the permissible ambient temperature
Damage to the pump (set)!

- Observe the specified limits for permissible ambient temperatures.

Observe the following parameters and values during operation:

Table 9: Permissible ambient temperatures

Permissible ambient temperature	Value
Maximum	40 °C

6.2.2 Frequency of starts

DANGER

Excessive surface temperature of the motor
Explosion hazard!
Damage to the motor!

- In case of explosion-proof motors, observe the frequency of starts specified in the manufacturer's product literature.

The frequency of starts is usually determined by the maximum temperature increase of the motor. This largely depends on the power reserves of the motor in steady-state operation and on the starting conditions (DOL, star-delta, moments of inertia, etc). If the start-ups are evenly spaced over the period indicated, the following limits serve as orientation for start-up with the discharge-side gate valve slightly open:

Table 10: Frequency of starts

Impeller material	Maximum number of start-ups [Start-ups/hour]
Grey cast iron (JL1040/ A48CL35B)	15
Bronze (CC480K-GS/B30 C90700)	6
Stainless steel (1.4408/ A743 GR CF8M)	6

CAUTION

Re-starting while motor is still running down
Damage to the pump (set)!

- Do not re-start the pump set before the pump rotor has come to a standstill.

6.2.3 Fluid handled

6.2.3.1 Flow rate

Table 11: Flow rate

Temperature range (t)	Minimum flow rate	Maximum flow rate
-30 to +70 °C	≈ 15 % of Q_{Opt} [2)]	See hydraulic characteristic curves
> 70 to +140 °C	≈ 25 % of Q_{Opt} [2)]	

The calculation formula below can be used to check if an additional heat build-up could lead to a dangerous temperature increase at the pump surface.

2) Best efficiency point

$$T_O = T_f + \Delta\vartheta$$

$$\Delta\vartheta = \frac{g \times H}{c \times \eta} \times (1 - \eta)$$

Table 12: Key

Symbol	Description	Unit
c	Specific heat capacity	J/kg K
g	Gravitational constant	m/s²
H	Pump discharge head	m
T_f	Fluid temperature	°C
T_o	Temperature at the casing surface	°C
η	Pump efficiency at duty point	-
$\Delta\vartheta$	Temperature difference	K

6.2.3.2 Density of the fluid handled

The pump input power changes in proportion to the density of the fluid handled.

CAUTION

Impermissibly high density of the fluid pumped
Motor overload!

- ▹ Observe the information on density given in the order documentation.
- ▹ Make sure the motor has sufficient power reserves.

6.2.3.3 Abrasive fluids

Do not exceed the maximum permissible solids content specified in the order.
When the pump handles fluids containing abrasive substances, increased wear of the hydraulic system and the shaft seal are to be expected. In this case, reduce the commonly recommended inspection intervals.

6.3 Shutdown/storage/preservation

6.3.1 Measures to be taken for shutdown

The pump (set) remains installed

✓ Sufficient fluid is supplied for the operation check run of the pump.

1. Start up the pump (set) regularly between once a month and once every three months for approximately five minutes during prolonged shutdown periods. This will prevent the formation of deposits within the pump and the pump intake area.

The pump (set) is removed from the pipe and stored

✓ The pump has been properly drained and the safety instructions for dismantling the pump have been observed. (⇨ Section 7.4.1 Page 33)

1. Spray-coat the inside wall of the pump casing, and in particular the impeller clearance areas, with a preservative.
2. Spray the preservative through the suction and discharge nozzles.
   It is advisable to close the pump nozzles (e.g. with plastic caps or similar).
3. Oil or grease all exposed machined parts and surfaces of the pump (with silicone-free oil and grease, food-approved if required) to protect them against corrosion.
   Observe the additional instructions (⇨ Section 3.3 Page 13) .

If the pump set is to be stored temporarily, only preserve the wetted components made of low-alloy materials. Commercially available preservatives can be used for this purpose. Observe the manufacturer's instructions for application/removal.

Observe any additional instructions and information provided. (⇨ Section 3 Page 12)

6.4 Returning to service

For returning the pump to service observe the sections on commissioning/start-up and the operating limits. (⇨ Section 6.2 Page 25)

In addition, carry out all servicing/maintenance operations before returning the pump (set) to service. (⇨ Section 7 Page 29)

	⚠ **WARNING** **Failure to re-install or re-activate protective devices** Risk of personal injury from moving parts or escaping fluid! ▹ As soon as the work is complete, re-install and/or re-activate any safety-relevant and protective devices.

	NOTE If the pump has been out of service for more than one year, replace all elastomer seals.

7 Servicing/Maintenance

7.1 Safety regulations

⚠ DANGER

Sparks produced during servicing work
Explosion hazard!

- Observe the safety regulations in force at the place of installation!
- Always perform maintenance work at an explosion-proof pump (set) outside of potentially explosive atmospheres.

⚠ DANGER

Improperly serviced pump set
Explosion hazard!
Damage to the pump set!

- Service the pump set regularly.
- Prepare a maintenance schedule with special emphasis on lubricants, shaft seal and coupling.

The operator ensures that all maintenance, inspection and installation work is performed by authorised, qualified specialist personnel who are thoroughly familiar with the manual.

⚠ WARNING

Unintentional starting of pump set
Risk of injury by moving parts!

- Make sure that the pump set cannot be started up unintentionally.
- Always make sure the electrical connections are disconnected before carrying out work on the pump set.

⚠ WARNING

Fluids, consumables and supplies which are hot and/or pose a health hazard
Risk of injury!

- Observe all relevant laws.
- When draining the fluid take appropriate measures to protect persons and the environment.
- Decontaminate pumps which handle fluids posing a health hazard.

⚠ WARNING

Insufficient stability
Risk of crushing hands and feet!

- During assembly/dismantling, secure the pump (set)/pump parts to prevent tipping or falling over.

A regular maintenance schedule will help avoid expensive repairs and contribute to trouble-free, reliable operation of the pump, pump set and pump parts with a minimum of servicing/maintenance expenditure and work.

NOTE

All maintenance, service and installation work can be carried out by Speck Pumpen or authorised workshops. Contact our sales staff to discuss your requirements.

Never use force when dismantling and reassembling the pump set.

7.2 Servicing/inspection

7.2.1 Supervision of operation

DANGER

Risk of potentially explosive atmosphere inside the pump
Explosion hazard!

- The pump internals in contact with the fluid to be handled, including the seal chamber and auxiliary systems must be filled with the fluid to be handled at all times.
- Provide sufficient inlet pressure.
- Provide an appropriate monitoring system.

DANGER

Incorrectly serviced shaft seal
Explosion hazard!
Leakage of hot, toxic fluids!
Damage to the pump set!
Risk of burns!
Fire hazard!

- Regularly service the shaft seal.

DANGER

Excessive temperatures as a result of bearings running hot or defective bearing seals
Explosion hazard!
Fire hazard!
Damage to the pump set!
Risk of burns!

- Regularly check the lubricant level.
- Regularly check the rolling element bearings for running noises.

DANGER

Incorrectly serviced barrier fluid system
Explosion hazard!
Fire hazard!
Damage to the pump set!
Leakage of hot and/or toxic fluids!

- Regularly service the barrier fluid system.
- Monitor the barrier fluid pressure.

CAUTION

Increased wear due to dry running
Damage to the pump set!

- Never operate the pump set without liquid fill.
- Never close the shut-off element in the suction line and/or supply line during pump operation.

CAUTION

Impermissibly high temperature of fluid handled
Damage to the pump!

- ▹ Prolonged operation against a closed shut-off element is not permitted (heating up of the fluid).
- ▹ Observe the temperature limits in the section on operating limits. (⇨ Section 6.2 Page 25)

While the pump is in operation, observe and check the following:

- The pump must run quietly and free from vibrations at all times.
- In case of oil lubrication, ensure the oil level is correct.
- Check the shaft seal. (⇨ Section 6.1.4 Page 24)
- Check the static seals for leakage.
- Check the rolling element bearings for running noises.
  Vibrations, noise and an increase in current input occurring during unchanged operating conditions indicate wear.
- Monitor the correct functioning of any auxiliary connections.
- During operation the pump set is subjected to vibrations which can loosen screwed connections. Regularly check the pump set for any loose connections.
- Monitor the stand-by pump.
  To make sure that the stand-by pumps are ready for operation, start them up once a week.
- Monitor the bearing temperature.
  The bearing temperature must not exceed 90 °C (measured on the outside of the bearing bracket).

CAUTION

Operation outside the permissible bearing temperature
Damage to the pump!

- ▹ The bearing temperature of the pump (set) must never exceed 90 °C (measured on the outside of the bearing bracket).

NOTE

After commissioning, increased temperatures may occur at grease-lubricated rolling element bearings due to the running-in process. The final bearing temperature is only reached after a certain period of operation (up to 48 hours depending on the conditions).

7.2.2 Inspection work

⚠ DANGER

Excessive temperatures caused by friction, impact or frictional sparks
Explosion hazard!
Fire hazard!
Damage to the pump set!

- ▹ Regularly check the cover plates, plastic components and other guards of rotating parts for deformation and sufficient distance from rotating parts.

7.2.2.1 Checking the clearances

If the clearances need to be checked, remove the impeller. (⇨ Section 7.4.6 Page 35)
If the clearance is larger than permitted (cf. table below), fit new casing wear ring 502.1 and/or 502.2.
The clearances given refer to the impeller diameter.

Table 13: Clearances between impeller and casing and/or between impeller and casing cover

Impeller material	Permissible clearance	
	New	Maximum
Grey cast iron (JL1040/ A48CL35B)	0.3 mm	0.9 mm
Bronze (CC480K-GS/B30 C90700)		
Stainless steel (1.4408/ A743 GR CF8M)	0.5 mm	1.5 mm

7.2.2.2 Removing the suction strainer from the pre-filter casing and re-inserting it

The suction strainer in the pre-filter casing has to be cleaned at appropriate intervals. A clogged suction strainer will reduce the flow rate of the pump and will not provide adequate filtration.

⚠ WARNING

Unintentional starting of pump set
Risk of injury by moving parts!

- ▹ Make sure that the pump set cannot be started up unintentionally.
- ▹ Always make sure the electrical connections are disconnected before carrying out work on the pump set.

1. Switch off the pump and take suitable measures to prevent it from being switched on unintentionally.
2. Close the shut-off elements in the suction/inlet line and discharge line.
3. Drain the pre-filter casing via drain plug 903.3.
4. Unscrew star handles 925. Take off filter cover 160.
5. Remove suction strainer 143.
6. Clean the suction strainer with a high-pressure water jet (e.g. steam cleaner) and a brush.
7. Re-insert the suction strainer.
8. Fit filter cover 160. Evenly tighten star handles 925 crosswise by hand.
9. Open the shut-off elements.

CAUTION

Shaft seal failure caused by insufficient lubrication
Damage to the pump!

- ▹ Before starting up the pump set, vent the pump and suction line and prime both with the fluid to be handled.

10. Vent the pump unit via the Rp 3/8" ball valve 743.

7.2.2.3 Filter cover made of acrylic glass (available as an option)

CAUTION

Use of aggressive or corrosive cleaning agents
Damage to the acrylic glass surface!
Stress cracks can occur in the cover, which can eventually destroy it!

- ▹ Do not use any aggressive cleaning agents or solvents such as spirit.
- ▹ Do not use any sharp-edged tools such as knives or metal scrapers, steel wool, the scouring pad of scrub sponges, or similar.

For cleaning a filter cover made of acrylic glass use warm water mixed with a small amount of domestic dishwashing liquid, and a soft cloth.

7.3 Drainage/cleaning

⚠ WARNING

Fluids, consumables and supplies which are hot and/or pose a health hazard
Hazard to persons and the environment!

- ▹ Collect and properly dispose of flushing fluid and any residues of the fluid handled.
- ▹ Wear safety clothing and a protective mask, if required.
- ▹ Observe all legal regulations on the disposal of fluids posing a health hazard.

1. Use screw plug 903.3 to drain the fluid handled.
2. Always flush the pump if it has been used for handling noxious, explosive, hot or other hazardous fluids.
   Always flush and clean the pump before transporting it to the workshop.
   Provide a cleaning record for the pump. (⇨ Section 11 Page 49)

7.4 Dismantling the pump set

7.4.1 General information/Safety regulations

⚠ WARNING

Unqualified personnel performing work on the pump (set)
Risk of injury!

- ▹ Always have repair and maintenance work performed by specially trained, qualified personnel.

⚠ WARNING

Hot surface
Risk of injury!

- ▹ Allow the pump set to cool down to ambient temperature.

⚠ WARNING

Improper lifting/moving of heavy assemblies or components
Personal injury and damage to property!

- ▹ Use suitable transport devices, lifting equipment and lifting tackle to move heavy assemblies or components.

Observe the general safety instructions and information. (⇨ Section 7.1 Page 29)

For any work on the motor, observe the instructions of the relevant motor manufacturer.

For dismantling and reassembly observe the exploded views and the general assembly drawing.

In the event of damage, you can always contact our service departments.

NOTE

All maintenance, service and installation work can be carried out by Speck Pumpen or authorised workshops. Contact our sales staff to discuss your requirements.

⚠ DANGER

Insufficient preparation of work on the pump (set)
Risk of injury!

- ▹ Properly shut down the pump set. (⇨ Section 6.1.5 Page 25)
- ▹ Close the shut-off elements in suction and discharge line.
- ▹ Drain the pump and release the pump pressure.
- ▹ Close any auxiliary connections.
- ▹ Allow the pump set to cool down to ambient temperature.

NOTE

After a prolonged period of operation the individual components may be hard to pull off the shaft. If this is the case, use a brand name penetrating agent and/or - if possible - an appropriate puller.

7.4.2 Preparing the pump set

1. De-energise the pump set and secure it against unintentional start-up.
2. Reduce pressure in the piping by opening a consumer installation.
3. Disconnect and remove all auxiliary pipework.

7.4.3 Removing the complete pump set from the piping

NOTE

The pre-filter casing and/or pump casing can also remain installed in the piping for further dismantling of the pump set.

✓ The notes and steps stated in (⇨ Section 7.4.1 Page 33) to (⇨ Section 7.4.2 Page 34) have been observed/carried out.

1. Disconnect the discharge and suction nozzles from the piping.
2. Unbolt the pre-filter casing from the foundation.
3. Remove the complete pump set from the piping.

7.4.4 Removing the motor

⚠ WARNING

Motor tipping over
Risk of crushing hands and feet!

- ▹ Suspend or support the motor to prevent it from tipping over.

✓ The notes and steps stated in (⇨ Section 7.4.1 Page 33) to (⇨ Section 7.4.3 Page 34) have been observed/carried out.

1. Undo bolts of cover plates 68-3.01/.02.
2. Remove cover plates 68-3.01/.02 from drive lantern 341.
3. Undo hexagon head bolts 901.50.
4. Insert both lock washers 931.95 into the groove in shaft 210.
5. Tighten hexagon head bolts 901.50.
6. Undo hexagon nuts 920.11.
7. Remove the motor.

7.4.5 Removing the back pull-out unit

⚠ WARNING

Back pull-out unit tipping over
Risk of squashing hands and feet!

- ▹ Suspend or support the back pull-out unit at the pump end.

✓ The notes and steps stated in (⇨ Section 7.4.1 Page 33) to (⇨ Section 7.4.4 Page 34) have been observed/carried out.

1. If required, suspend or support the back pull-out unit to prevent it from tipping over.
2. Undo hexagon nut 920.1 at the volute casing.
3. Use forcing screws 901.30 to remove the back pull-out unit from its seat in the volute casing. Pull the back pull-out unit completely out of volute casing 102.
4. Remove and dispose of gasket 400.10.
5. Place the back pull-out unit on a clean and level surface.

7.4.6 Removing the impeller

✓ The notes and steps stated in (⇨ Section 7.4.1 Page 33) to (⇨ Section 7.4.5 Page 35) have been observed/carried out.

✓ The back pull-out unit is kept in a clean and level assembly area.

1. Undo impeller nut 920.95 (right-hand thread).
2. Remove impeller 230 with an impeller removal tool.
3. Place impeller 230 on a clean and level surface.
4. Remove key 940.01 from shaft 210.

7.4.7 Removing the mechanical seal

✓ The notes and steps stated in (⇨ Section 7.4.1 Page 33) to (⇨ Section 7.4.6 Page 35) have been observed/carried out.

✓ The back pull-out unit is kept in a clean and level assembly area.

1. Remove shaft sleeve 523 with the rotating assembly of the mechanical seal (primary ring) from shaft 210.
2. Remove the rotating assembly of the mechanical seal (primary ring) from shaft sleeve 523.
3. Undo hexagon nuts 920.01 and 914.22, if any, on drive lantern 341.
4. Remove casing cover 161 from drive lantern 341.
5. Remove the stationary assembly of the mechanical seal (mating ring) from casing cover 161.
6. Remove and dispose of gasket 400.75.

7.5 Reassembling the pump set

7.5.1 General information/Safety regulations

⚠ DANGER

Wrong selection of motor
Explosion hazard!

- ▹ Use an original motor or a motor of identical design from the same manufacturer.
- ▹ The permissible temperature limits at the motor flange and motor shaft must be higher than the temperatures generated by the pump.

	⚠ WARNING **Improper lifting/moving of heavy assemblies or components** Personal injury and damage to property! ▹ Use suitable transport devices, lifting equipment and lifting tackle to move heavy assemblies or components.

	CAUTION **Improper reassembly** Damage to the pump! ▹ Reassemble the pump (set) in accordance with the general rules of sound engineering practice. ▹ Use original spare parts only.

Sequence
Always reassemble the pump in accordance with the corresponding general assembly drawing or exploded view.

Sealing elements
Check O-rings for any damage and replace by new O-rings, if required.

Always use new gaskets, making sure that they have the same thickness as the old ones.

Always fit gaskets of asbestos-free materials or graphite without using lubricants (e.g. copper grease, graphite paste).

Assembly adhesives
Avoid the use of assembly adhesives, if possible.

Should an assembly adhesive be required after all, use a commercially available contact adhesive (e.g. Pattex) or sealant (e.g. HYLOMAR or Epple 33).

Only apply adhesive at selected points and in thin layers.

Never use quick-setting adhesives (cyanoacrylate adhesives).

Coat the locating surfaces of the individual components with graphite or similar before reassembly.

Tightening torques
For reassembly, tighten all screws and bolts as specified in this manual.

7.5.2 Installing the mechanical seal

Installing the mechanical seal
The following rules must be observed when installing the mechanical seal:

- Work cleanly and accurately.
- Only remove the protective wrapping of the contact faces immediately before installation takes place.
- Prevent any damage to the sealing surfaces or O-rings.

✓ The notes and steps stated in (⇨ Section 7.5.1 Page 35) have been observed/ carried out.

✓ The bearing assembly as well as the individual parts have been placed in a clean and level assembly area.

✓ All dismantled parts have been cleaned and checked for wear.

✓ Any damaged or worn parts have been replaced by original spare parts.

✓ The sealing surfaces have been cleaned.

1. Clean shaft sleeve 523, and touch up any score marks or scratches with a polishing cloth, if necessary.
   If score marks or scratches are still visible, fit new shaft sleeve 523.
2. Slide shaft sleeve 523 with new gasket 400.75 onto shaft 210.
3. Clean the mating ring location in casing cover 161.

CAUTION

Elastomers in contact with oil/grease
Shaft seal failure!

- ▹ Use water as assembly lubricant.
- ▹ Never use oil or grease as assembly lubricant.

4. Carefully insert the mating ring. Make sure to apply pressure evenly.
5. **On variants with a bolted casing cover** undo forcing screws 901.31 without removing them.
6. Place casing cover 161 into the locating fit of drive lantern 341.
7. Fit and tighten hexagon nuts 920.01 and/or 920.15, if any.

NOTE

To reduce friction forces when assembling the seal, wet the shaft sleeve and the location of the stationary ring with water.

8. Fit the rotating assembly of the mechanical seal (primary ring) on shaft sleeve 523.

Observe the following installation dimension b for mechanical seals with installation length L_{1k} to EN 12756 (design KU):

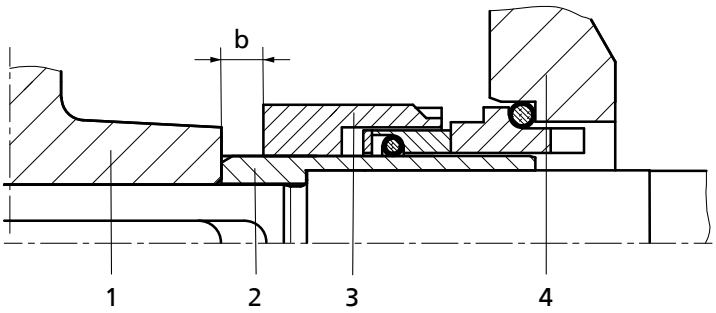

Fig. 5: Installation dimension b of mechanical seal

1	Impeller	2	Shaft sleeve
3	Mechanical seal	4	Casing cover

Table 14: Installation dimensions of the mechanical seal

Shaft unit[3)]	Installation dimension b
25	7.5 mm
35	10 mm
55	15 mm

7.5.3 Fitting the impeller

- ✓ The notes and steps stated in (⇨ Section 7.5.1 Page 35) to (⇨ Section 7.5.2 Page 36) have been observed/carried out.
- ✓ The pre-assembled unit (motor, shaft, drive lantern, casing cover) as well as the individual parts have been placed in a clean and level assembly area.
- ✓ All dismantled parts have been cleaned and checked for wear.
- ✓ Any damaged or worn parts have been replaced by original spare parts.
- ✓ The sealing surfaces have been cleaned.

1. Insert key 940.01 and slide impeller 230 onto shaft 210.
2. Fasten impeller nut 920.95, safety device 930.95 and disc 550.95, if any. Observe the tightening torques. (⇨ Section 7.6 Page 40)

3) Shaft unit see order.

7.5.4 Installing the back pull-out unit

⚠	**⚠ WARNING** **Back pull-out unit tipping over** Risk of squashing hands and feet! ▹ Suspend or support the back pull-out unit at the pump end.

✓ The notes and steps stated in (⇨ Section 7.5.1 Page 35) to (⇨ Section 7.5.3 Page 37) have been observed/carried out.

✓ Any damaged or worn parts have been replaced by original spare parts.

✓ The sealing surfaces have been cleaned.

1. If required, suspend or support the back pull-out unit to prevent it from tipping over.
2. Fit new gasket 400.10 into the recess of volute casing 102.
3. **On variants with a bolted casing cover** undo forcing screws 901.31 without removing them.
4. Insert the back pull-out unit into volute casing 102.
5. Tighten hexagon nut 920.15 (on variant with a bolted casing cover) or 920.01 (on variant with a clamped casing cover) at volute casing 102.

7.5.5 Mounting the motor

Ex	**⚠ DANGER** **Incorrect shaft connection** Explosion hazard! ▹ Connect the shafts between pump and motor as described in this manual.

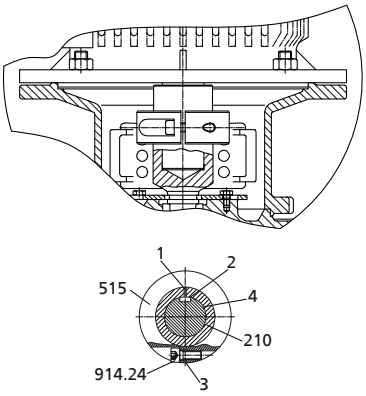

Fig. 6: Fitting the motor shaft stub on the shaft

1	Shaft slot	2	Keyway of the motor shaft end
3	Slot of the taper lock ring	4	Motor shaft
515	Taper lock ring	210	Shaft
914.24	Hexagon socket head cap screw		

✓ The notes and steps stated in (⇨ Section 7.5.1 Page 35) to (⇨ Section 7.5.4 Page 38) have been observed/carried out.

1. Fit the motor shaft stub on shaft 210 and make sure that the keyway of the motor shaft end aligns with the slot in shaft 210 and that both are located opposite the slot of taper lock ring 515 (see illustration: Fitting the motor shaft stub on the shaft).
2. Tighten hexagon socket head cap screw 914.24. (⇨ Section 7.6 Page 40)
3. Undo hexagon head bolts 901.50.

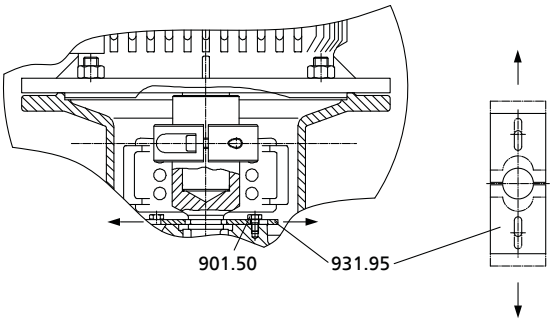

Fig. 7: Removing the lock washers

901.50	Hexagon head bolts	931.95	Lock washer

4. Pull both lock washers 931.95 out of the groove in shaft 210.
5. Tighten hexagon head bolts 901.50.
6. Fit and tighten hexagon nuts 920.11.

7.6 Tightening torques

Table 15: Tightening points

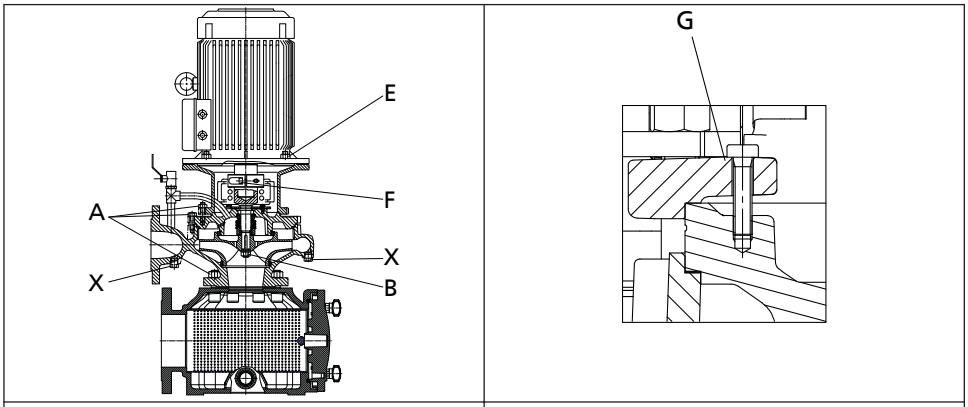

Variant with bolted casing cover	Variant with clamped casing cover

Table 16: Tightening torques for bolted/screwed connections at the pump

Position	Thread	Nominal value [Nm]
A	M12	55
	M16	130
B	M12 x 1.5	55
	M24 x 1.5	130
	M30 x 1.5	170
E	M8	20
	M10	38
	M12	55
	M16	130
F	M6	15
	M8	38
	M10	38
	M12	55
G	M6	5
X	1/8	25
	1/4	55
	3/8	80
	1/2	130
	3/4	220

7.7 Spare parts stock

7.7.1 Ordering spare parts

Always quote the following data when ordering replacement or spare parts:

- Series code
- Type series
- Size
- Material variant
- Year of construction

Refer to the name plate for all data. (⇨ Section 4.3 Page 15)

Also specify the following data:

- Part No. and description (⇨ Section 9.1 Page 44)
- Quantity of spare parts
- Shipping address
- Mode of dispatch (freight, mail, express freight, air freight)

7.7.2 Recommended spare parts stock for 2 years' operation to DIN 24296

Table 17: Quantity of spare parts for recommended spare parts stock

Part No.	Description	Number of pumps (including stand-by pumps)						
		2	3	4	5	6 and 7	8 and 9	10 and more
210	Shaft	1	1	1	2	2	2	20 %
230	Impeller	1	1	1	2	2	2	20 %
	Gaskets (set)	4	6	8	8	9	10	100 %
433	Mechanical seal	1	1	2	2	2	3	25 %
502.1	Casing wear ring	2	2	2	3	3	4	50 %
502.2	Casing wear ring	2	2	2	3	3	4	50 %
523	Shaft sleeve	2	2	2	3	3	4	50 %

8 Trouble-shooting

	⚠ **WARNING** **Improper work to remedy faults** Risk of injury! ▹ For any work to remedy faults observe the relevant information in this manual or in the relevant accessory manufacturer's documentation.

If problems occur that are not described in the following table, consultation with the customer service is required.

A Pump delivers insufficient flow rate
B Motor is overloaded
C Excessive discharge pressure
D Increased bearing temperature
E Leakage at the pump
F Excessive leakage at the shaft seal
G Vibrations during pump operation
H Impermissible temperature increase in the pump

Table 18: Trouble-shooting

A	B	C	D	E	F	G	H	Possible cause	Remedy[4)]
✗	-	-	-	-	-	-	-	Pump delivers against an excessively high pressure.	Re-adjust to duty point. Check system for impurities. Fit a larger impeller.[5)] Increase the speed (turbine, I.C. engine).
✗	-	-	-	-	-	✗	✗	Pump or piping are not completely vented or primed.	Vent and/or prime.
✗	-	-	-	-	-	-	-	Supply line or impeller clogged	Remove deposits in the pump and/or piping.
✗	-	-	-	-	-	-	-	Formation of air pockets in the piping	Alter piping layout. Fit vent valve.
✗	-	-	-	-	-	✗	✗	Suction lift is too high/NPSHavailable (positive suction head) is too low.	Check/alter fluid level. Install pump at a lower level. Fully open the shut-off element in the suction line. Change suction line, if the friction losses in the suction line are too high. Check any strainers installed/suction opening. Observe permissible speed of pressure fall.
✗	-	-	-	-	-	-	-	Air intake at the shaft seal	Supply external barrier fluid, if necessary, or increase barrier fluid pressure. Replace shaft seal.
✗	-	-	-	-	-	-	-	Wrong direction of rotation	Check the electrical connection of the motor and the control system, if any.
✗	-	-	-	-	-	-	-	Speed is too low. - Operation with frequency inverter - Operation without frequency inverter	 - Increase voltage/frequency at the FI in the permissible range. - Check voltage.
✗	-	-	-	-	-	✗	-	Wear of internal components	Replace worn components by new ones.
-	✗	-	-	-	-	✗	-	Pump back pressure is lower than specified in the purchase order.	Re-adjust to duty point. In the case of persistent overloading, turn down impeller.[5)]
-	✗	-	-	-	-	-	-	Density or viscosity of fluid handled higher than stated in purchase order	Contact the manufacturer.
-	-	-	-	-	✗	-	-	Use of unsuitable shaft seal materials	Change the material combination. [5)]

4) Pump pressure must be released before attempting to remedy faults on parts which are subjected to pressure.
5) Contact the manufacturer.

A	B	C	D	E	F	G	H	Possible cause	Remedy[4)]
-	✗	✗	-	-	-	-	-	Speed is too high.	Reduce speed.[5)]
-	-	-	-	✗	-	-	-	Tie bolts/sealing element defective	Fit new sealing element between volute casing and casing cover. Re-tighten the bolts.
-	-	-	-	-	✗	-	-	Worn shaft seal	Fit new shaft seal. Check flushing liquid/barrier fluid.
✗	-	-	-	-	✗	-	-	Score marks or roughness on shaft protecting sleeve / shaft sleeve	Replace shaft protecting sleeve / shaft sleeve. Fit new shaft seal.
-	-	-	-	-	✗	-	-	Dismantle to find out.	Correct. Fit new shaft seal, if required.
-	-	-	-	-	✗	-	-	Vibrations during pump operation	Correct suction conditions. Re-align the pump set. Re-balance the impeller. Increase pressure at the pump suction nozzle.
-	-	-	✗	-	✗	✗	-	Pump is warped or sympathetic vibrations in the piping.	Check the piping connections and secure fixing of pump; if required, reduce distances between the pipe clamps. Fix the pipelines using anti-vibration material.
-	-	-	✗	-	-	-	-	Increased axial thrust[5)]	Clean balancing holes in the impeller. Replace the casing wear rings.
-	-	-	✗	-	-	-	-	Insufficient or excessive quantity of lubricant or unsuitable lubricant.	Top up, reduce or change lubricant.
✗	✗	-	-	-	-	-	-	Motor is running on two phases only.	Replace the defective fuse. Check the electric cable connections.
-	-	-	-	-	-	✗	-	Rotor out of balance	Clean the impeller. Re-balance the impeller.
-	-	-	-	-	-	✗	-	Defective bearing(s)	Replace.
-	-	-	✗	-	-	✗	✗	Flow rate is too low.	Increase the minimum flow rate.
-	-	-	-	-	✗	-	-	Incorrect inflow of circulation liquid.	Increase the free cross-section.
-	✗	✗	-	-	-	-	-	Transport lock has not been removed from the shaft groove.	Remove transport lock from the shaft groove.

4) Pump pressure must be released before attempting to remedy faults on parts which are subjected to pressure.

9 Related Documents

9.1 General assembly drawings

9.1.1 Variant with single mechanical seal and bolted casing cover

Table 19: This view applies to the following pump sizes:

32-200	40-200	50-200	65-200	80-250	100-250	125-250	150-250
32-250	40-250	50-250	65-250	80-315	100-315	125-315	150-315
	40-315	50-315	65-315	80-400	100-400	125-400	150-400

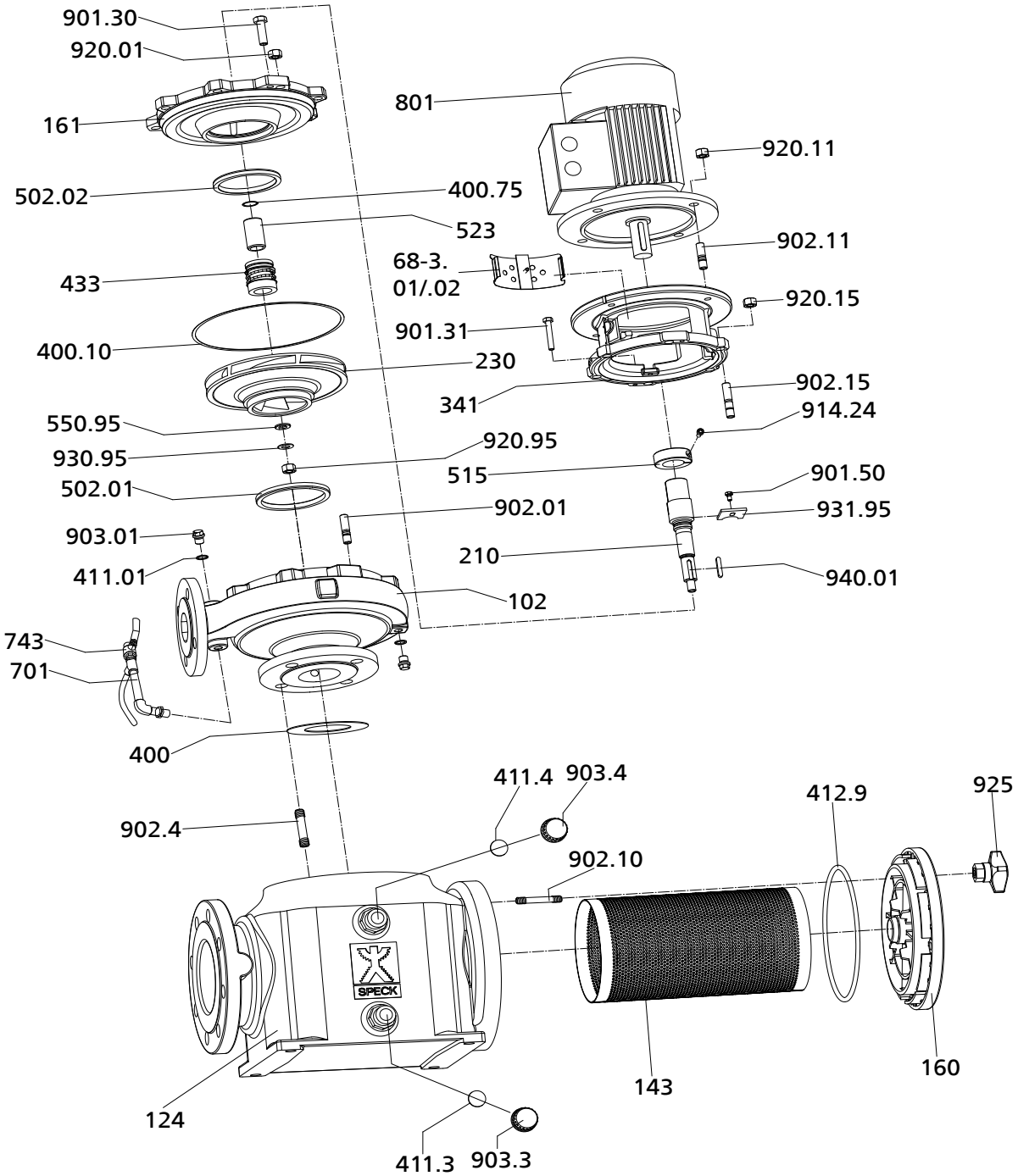

Fig. 8: Variant with single mechanical seal and bolted casing cover

Table 20: List of components[6)]

Part No.	Description
102	Volute casing
124	Pre-filter casing
143	Suction strainer
160	Cover
161	Casing cover
210	Shaft
230	Impeller
341	Drive lantern
400	Gasket
400.10	Gasket
400.75	Gasket
411.01	Sealing element
411.3	Sealing element
411.4	Sealing element
412.9	O-ring
433	Mechanical seal
502.01	Casing wear ring
502.02	Casing wear ring
515	Taper lock ring
523	Shaft sleeve
550.95	Disc
68-3.01/.02	Cover plate
701	Circulation line
743	Ball valve for venting (Rp 3/8")
801	Flanged motor
901.30	Hexagon head bolt
901.31	Hexagon head bolt
901.50	Hexagon head bolt
902.01	Stud
902.4	Stud
902.10	Stud
902.11	Stud
902.15	Stud
903.01	Screw plug
903.3	Screw plug
903.4	Screw plug
914.24	Hexagon socket head cap screw
920.01	Hexagon nut
920.11	Hexagon nut
920.15	Hexagon nut
920.95	Hexagon nut
925	Star handle
930.95	Spring washer
931.95	Lock washer
940.01	Key

6) Some individual components might not be applicable, depending on the pump size and material.

9.1.2 Variant with single mechanical seal and clamped casing cover

Table 21: This view applies to the following pump sizes:

32-125	40-125	50-125	65-125	80-160	100-160	125-200	150-200
32-160	40-160	50-160	65-160	80-200	100-200		

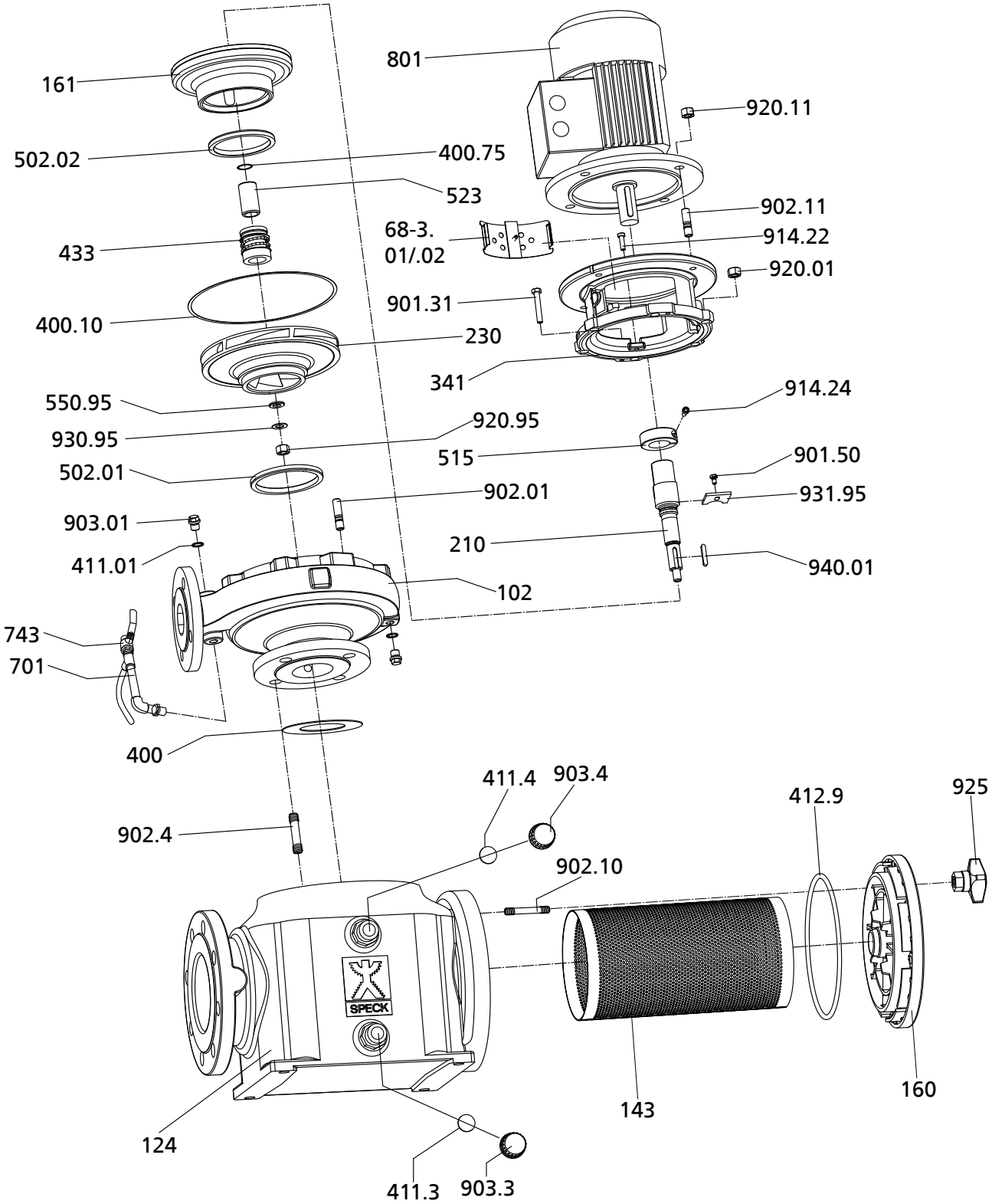

Fig. 9: Variant with single mechanical seal and clamped casing cover

Table 22: List of components[7)]

Part No.	Description
102	Volute casing
124	Pre-filter casing
143	Suction strainer
160	Cover
161	Casing cover
210	Shaft
230	Impeller
341	Drive lantern
400	Gasket
400.10	Gasket
400.75	Gasket
411.01	Sealing element
411.3	Sealing element
411.4	Sealing element
412.9	O-ring
433	Mechanical seal
502.01	Casing wear ring
502.02	Casing wear ring
515	Taper lock ring
523	Shaft sleeve
550.95	Disc
68-3.01/.02	Cover plate
701	Circulation line
743	Ball valve for venting (Rp 3/8")
801	Flanged motor
901.31	Hexagon head bolt
901.50	Hexagon head bolt
902.01	Stud
902.4	Stud
902.10	Stud
902.11	Stud
903.01	Screw plug
903.3	Screw plug
903.4	Screw plug
914.22	Hexagon socket head cap screw
914.24	Hexagon socket head cap screw
920.01	Hexagon nut
920.11	Hexagon nut
920.95	Hexagon nut
925	Star handle
930.95	Spring washer
931.95	Lock washer
940.01	Key

7) Some individual components might not be applicable, depending on the pump size and material.

10 EC Declaration of Conformity

EG - Konformitätserklärung
D / F / GB / I / NL / FI / SP / PL / CZ / SK / DK / SE / TR / RU

speck pumpen SPECK
VERKAUFSGESELLSCHAFT GmbH

Déclaration CE de conformité / EC declaration of conformity / Dichiarazione CE di conformità / EG-verklaring van overeenstemming / EU-yhtäpitävyysilmoitus / Declaración de conformidad / Deklaracja zgodności CE / ES prohlášení o shodě / ES vyhlásenie o zhode / EF-overensstemmelseserklæring / EG-deklaration om överensstämmelse / AT Uygunluk Beyanı / Декларация соответствия ЕС

Hiermit erklären wir, dass das Pumpenaggregat / Maschine

Par la présente, nous déclarons que le groupe moteur-pompe / Herewith we declare that the pump unit / Si dichiara, che la pompa / hiermee verklaren wij, dat het pompaggregaat / Täten ilmoitamme, että pumppulaite / Por la presente declaramos que la unidad de bomba / Niniejszym oświadczamy, że pompa / Prohlašujeme, že níže uvedené čerpadlo / Vyhlasujeme, že nižšie uvedené čerpadlo: / Hermed erklærer vi, at pumpeaggregatet/maskinen / Härmed tillkännager vi att pumpaggregatet/maskinen / Aşağıda adı geçen pompa ünitesinin/makinenin / Настоящим мы заявляем, что насосный агрегат/машина

Baureihe

Série / Series / Serie / Serie / Mallisarja / Serie / Typoszereg / Série / Série / Serie / Serie / Seri / Серии

BADU®Block-Pumpen

folgenden einschlägigen Bestimmungen entspricht:

correspond aux dispositions pertinentes suivantes: / complies with the following provisions applying to it: / è conforme alle sequenti disposizioni pertinenti: / in de door ons geleverde uitvoering voldoet aan de eisen van de in het vervolg genoemde bepalingen: / cumple las siguientes disposiciones pertinentes: / vastaa seuraavia asiaan kuuluvia määräyksiä: / odpowiada następującym odnośnym normom: / je v souladu s požadavky směrnic, které se na něj vztahují: / je v súladu s požiadavkami smerníc, ktoré sa na nej vzťahujú: / opfylder følgende gældende bestemmelser: / uppfyller följande tillämpliga bestämmelser: / aşağıda belirtilen geçerli yönetmeliklere uygun olduğunu beyan ediyoruz: / отвечает соответствующим положениям:

EG-Maschinenrichtlinie 2006/42/EG

CE-Directives européennes 2006/42/CE / EC-machinery directive 2006/42/EC / CE-Direttiva Macchine 2006/42/CE / EG-Machinerichtlijn 2006/42/EG / EU-konedirektiivi 2006/42/EU / directiva europea de maquinaria 2006/42/CE / Dyrektywa maszynowa 2006/42/EG / strojní směrnice 2006/42/ES / strojná smernica 2006/42/ES / EF-maskindirektiv 2006/42/EF / EG-maskindirektivet 2006/42/EG / AT Makine Emniyeti Yönetmeliği 2006/42/AT / Директива ЕС по машинам 2006/42/EG

EMV-Richtlinie 2004/108/EG

Directives CE sur la compatibilité électromagnétique 2004/108/CE / EMC-Machinery directive 2004/108/EC / Direttiva di compatibilità elettromagnetica 2004/108/CE / Richtlijn 2004/108/EG / Sähkömagneettinen yhteensopivuus (EMC) konedirektiivi 2004/108/EU / directiva 2004/108/CE / Dyrektywa kompatybilność elektromagnetyczna (EMC) 2004/108/EG / směrnice o elektromagnetické kompatibilitě 2004/108/ES / smernica o elektromagnetickej kompatibilite 2004/108/ES / EMC-direktiv 2004/108/EF / EMC-direktivet 2004/108/EG / EMC Yönetmeliği 2004/108/AT / Директива по электромагнитной совместимости 2004/108/EG

EG-Niederspannungsrichtlinie 2006/95/EG

Directives basse tension 2006/95/CE / Low voltage directive 2006/95/EC / CE-Direttiva di bassa tensione 2006/95/CE / EG-laagspanningsrichtlijn 2006/95/EG / EU-pienjännitedirektiivi 2006/95/EU / directiva de baja tensión 2006/95/CE / Dyrektywa niskonapięciowa 2006/95/EG / nízkonapěťová směrnice 2006/95/ES / nízkonapäťová smernica 2006/95/ES / EF-lavspændingsdirektiv 2006/95/EF / EG-lågspänningsdirektivet 2006/95/EG / AT Alçak Gerilim Yönetmeliği 2006/95/AT / Директива ЕС по низким напряжениям 2006/95/EG

EG-Richtlinie 2002/96/EG (WEEE)

Directive 2002/96/CE (DEEE) / Directive 2002/96/EC (WEEE) / Direttiva 2002/96/CE (WEEE) / EG-Richtlijn 2002/96/EG (WEEE) / EU-direktiivi 2002/96/EC (WEEE) / CE-Directiva 2002/96/EG (tratamiento de residuos de componentes de aparatos eléctricos y electrónicos en desuso / Dyrektywa 2002/96/EG (WEEE)) / směrnice 2002/96/ES (WEEE) / smernica 2002/96/ES (WEEE) / EF-direktiv 2002/96/EF (WEEE) / EG-direktivet 2002/96/EG (WEEE) / AT Yönetmeliği 2002/96/AT (WEEE) / Директива ЕС 2002/96/EG (WEEE)

EG-Richtlinie 2011/65/EG (RoHS)

Directive 2011/65/CE (RoHS) / Directive 2011/65/EC (RoHS) / Direttiva 2011/65/CE (RoHS) / EG-Richtlijn 2011/65/EG (RoHS) / EU-direktiivi 2011/65/EC (RoHS) / CE-Directiva 2011/65/EG (limitación de utilización de determinados productos peligrosos en aparatos eléctricos y electrónicos / Dyrektywa 2011/65/EG (RoHS)) / směrnice 2011/65/ES (RoHS) / smernica 2011/65/ES (RoHS) / EF-direktiv 2011/65/EF (RoHS) / EG-direktivet 2011/65/EG (RoHS) / AT Yönetmeliği 2011/65/AT (RoHS) / Директива ЕС 2011/65/EG (RoHS)

Angewendete harmonisierte Normen, insbesondere

Normes harmonisées utilisées, notamment: / Applied harmonized standard in particular / Norme armonizzate applicate in particolare / Gebruikte geharmoniseerde normen, in het bijzonder / Käytettyjä harmonisoituja normeja, erityisesti / Normas armonizadas aplicadas, especialmente / Zastosowane normy zharmonizowane, w szczególności / za použití následujících harmonizovaných norem / za použití nasledujúcich harmonizovaných noriem / Anvendte harmoniserede standarder, især / Tillämpade harmoniserade normer, i synnerhet / Uygulanmış harmonize standartlar, özellikle / Использованные согласованные нормы, в особенности

EN 12756:2001-03

EN 809:2012

DIN EN 60034-1:2000

D-91233 Neunkirchen a. Sand, 21.07.2014

Ort, Datum / Fait à, le / Place, date / Località, data / Plaats, Datum / Paikka, Päiväys / Lugar, Fecha / Miejscowość, Data / Místo, datum / Miesto, dátum / Sted, dato / Ort, datum / Yer, Tarih

Speck Pumpen Verkaufsgesellschaft GmbH
Hauptstraße 1-3, D-91233 Neunkirchen a. Sand

Adresse / Adresse / Address / Indirizzo / Adres / Osoite / Dirección / Adres / Adresa / Adresa / Adresse / Adress / Adres

i.V. S. Watolla, Techn. Leiter

Directeur Technique / Technical director / Direttore tecnico / Technisch directeur / Kierownik techniczny / Technický reditel / Technický riaditel / Teknisk chef / Tekn. Chef / Teknik Müdür / Технический руководитель

A. Herger, Geschäftsführer

Gérant / Director / Amministratore / Bedrijfsleider / Toimitusjohtaja / Gerente / Dyrektor zarządzający / Ředitel prodeje & marketingu / Obchodný riaditeľ / Direktør / Verkställande direktör / Genel Müdür / Директор

11 Certificate of Decontamination

Type: .....

Order number/
Order item number[8]: .....

Delivery date: .....

Field of application: .....

Fluid handled[8]: .....

Please tick where applicable[8]:

☐ Radioactive

☐ Explosive

☐ Corrosive

☐ Toxic

☐ Harmful

☐ Bio-hazardous

☐ Highly flammable

☐ Safe

Reason for return[8] .....

Comments: .....

.....

The product/accessories have been carefully drained, cleaned and decontaminated inside and outside prior to dispatch/ placing at your disposal.

We herewith declare that this product is free from hazardous chemicals, biological and radioactive substances.

For seal-less pumps, the rotor has been removed from the pump for cleaning. In cases of containment shroud leakage, the outer rotor, bearing bracket lantern, leakage barrier and bearing bracket or intermediate piece have also been cleaned.

For canned motor pumps, the stator space has been examined for fluid leakage; if fluid handled has penetrated the stator space, it has been removed.

☐ No special safety precautions are required for further handling.
☐ The following safety precautions are required for flushing fluids, fluid residues and disposal:

.....

.....

We confirm that the above data and information are correct and complete and that dispatch is effected in accordance with the relevant legal provisions.

.....	.....	.....
Place, date and signature	Address	Company stamp

8) Required fields