Electric powered forklift 1.5 - 2.0 ton

TRIGO48

3 wheel

TOYOTA

MATERIAL HANDLING

www.toyota-forklifts.eu

Electric powered forklift 1.5 - 1.6 t

Truck specifications					8FBE15T	8FBEK16T	8FBE16T
Identification	1.1	Manufacturer			TOYOTA	TOYOTA	TOYOTA
	1.2	Model			8FBE15T	8FBEK16T	8FBE16T
	1.3	Drive			Electric	Electric	Electric
	1.4	Operator type			Rider seated	Rider seated	Rider seated
	1.5	Load capacity/rated load	Q	kg	1500	1600	1600
	1.6	Load centre	c	mm	500	500	500
	1.8	Load distance, centre of drive axle to fork	x	mm	317	317	317
	1.9	Wheelbase	y	mm	1305	1413	1521
Weight	2.1	Service weight		kg	2976	3002	2981
	2.2	Axle load, with load, front/rear		kg	3953/523	4092/510	4097/484
	2.3	Axle load, without load, front/rear		kg	1451/1525	1508/1494	1584/1397
Tyres	3.1	Tyre - pneumatic (P), pneumatic shaped cushion (SE), solid rubber (R)			SE	SE	SE
	3.2	Tyre size, front			18x7-8	18x7-8	18x7-8
	3.3	Tyre size, rear			15x4.1/2x8	15x4.1/2x8	15x4.1/2x8
	3.5	Wheels, number front/rear (x=driven wheels)			2x/2	2x/2	2x/2
	3.6	Track width, front	b_{10}	mm	905	905	905
	3.7	Track width, rear	b_{11}	mm	180,6	180,6	180,6
Dimensions	4.1	Tilt of mast/fork carriage forward/backward	α/β	deg	5/7	5/7	5/7
	4.2	Height, mast lowered	h_1	mm	2120	2120	2120
	4.3	Free lift	h_2	mm	115	115	115
	4.4	Lift	h_3	mm	3265	3265	3265
		Lift height	h_{23}	mm	3300	3300	3300
	4.5	Height, mast extended	h_4	mm	3870	3870	3870
	4.7	Height of overhead guard (cab)	h_6	mm	2055	2055	2055
	4.8	Seat height/stand height	h_7	mm	954	954	954
	4.12	Coupling height	h_{10}	mm	537	537	537
	4.19	Overall length	l_1	mm	2772	2880	2988
	4.20	Length to face of forks	l_2	mm	1772	1880	1988
	4.21	Overall width	b_1	mm	1060	1060	1060
	4.22	Fork dimensions	s/e/l	mm	35/100/1000	35/100/1000	35/100/1000
	4.23	Fork carriage DIN 15 173, class/type A, B			IIA	IIA	IIA
	4.24	Fork-carriage width	b_3	mm	920	920	920
	4.31	Ground clearance, with load, below mast	m_1	mm	80	80	80
	4.32	Ground clearance, centre of wheelbase	m_2	mm	90	90	90
	4.33	Aisle width for pallets 1000 x 1200 crossways	A_{st}	mm	3102	3210	3318
	4.34	Aisle width for pallets 800 x 1200 lengthways	A_{st}	mm	3223	3331	3440
	4.35	Turning radius	W_a	mm	1455	1563	1671
	4.36	Internal turning radius	b_{13}	mm	0	0	0
Performance data	5.1	Travel speed, with/without load		km/h	16/16	16/16	16/16
	5.2	Lift speed, with/without load		m/s	0,44/0,61	0,43/0,61	0,43/0,61
	5.3	Lowering speed, with/without load		m/s	0,53/0,55	0,53/0,55	0,53/0,55
	5.5	Drawbar pull, with/without load		N	5068/5158	5041/5149	5044/5153
	5.6	Max. drawbar pull, with/without load		N	9519/9424	9491/9415	9495/9419
	5.7	Gradeability, with/without load		%	16,9/22,0	16,3/23,4	16,3/25,3
	5.8	Max. gradeability, with/without load		%	23,1/22,00	22,2/23,4	22,3/25,3
	5.9	Acceleration time, with/without load		s	4,5/4,1	4,6/4,2	4,6/4,2
	5.10	Service brake			Hydraulic	Hydraulic	Hydraulic
Electric motor	6.1	Drive motor rating S2 60 min		kW	6x2	6x2	6x2
	6.2	Lift motor rating S3 15%		kW	11	11	11
	6.3	Battery acc. to DIN 43 531/35/36 A, B, C, no			43 531A	43 531A	43 531A
	6.4	Battery voltage, nominal capacity K5		V/Ah	48/440-500	48/550-625	48/660-750
	6.5	Battery weight		kg	708	856	1013
	6.6	Energy consumption to VDI cycle		kWh/h	4,1	4,3	4,6
Others	8.1	Type of drive control			inverter MOSFET	inverter MOSFET	inverter MOSFET
	8.2	Operating pressure for attachments		bar	183	183	183
	8.3	Oil volume for attachments		l/min	41,3	41,3	41,3
	8.4	Sound level at the driver's ear according to EN 12 053		dB(A)	69,7	69,7	69,7

Performance data and dimensions are nominal and subject to tolerances.
Specifications are subject to change without notice.
Please obtain the latest specifications before contracting products.

Mast dimensions and rated capacities

Model			V							FV				FW				FSV						FSW								
8FBE15T/8FBEK16T /8FBE16T	Lift height	h_{23}	3000	3300	3500	3700	4000	4500	5000	3000	3300	3500	3700	3000	3300	3500	3700	4300	4500	4700	5000	5500	6000	4300	4500	4700	5000	5500	6000	6500	7000	7500
	Lift	h_3	2965	3265	3465	3665	3965	4465	4965	2965	3265	3465	3665	2965	3265	3465	3665	4265	4465	4665	4965	5465	5965	4265	4465	4665	4965	5465	5965	6465	6965	7465
	Height, mast lowered	h_1	1970	2120	2220	2380	2570	2820	3070	1970	2120	2220	2380	2000	2150	2250	2350	1970	2040	2120	2220	2380	2570	1980	2050	2150	2250	2450	2600	2800	3000	3200
	Height, mast extended [1]	h_4	3570	3870	4070	4270	4570	5070	5570	3580	3880	4080	4280	3555	3855	4055	4255	4845	5045	5245	5545	6045	6545	4845	5045	5245	5545	6045	6545	7045	7545	8045
	Height, mast extended [2]	h_4	4260	4560	4760	4960	5260	5760	6260	4260	4560	4760	4960	4260	4560	4760	4960	5560	5760	5960	6260	6760	7260	5560	5760	5960	6260	6760	7260	7760	8260	8760
	Free lift, without load backrest	h_2	115	115	115	115	115	115	115	1425	1575	1675	1835	1485	1635	1735	1835	1450	1520	1600	1700	1860	2050	1475	1545	1645	1745	1945	2095	2295	2495	2695
	Free lift, with load backrest	h_2	115	115	115	115	115	115	115	745	895	995	1155	780	930	1030	1130	745	815	895	995	1155	1345	760	830	930	1030	1230	1380	1580	1780	1980

1) Without load backrest

2) With load backrest; Height of standard load backrest is 1220 mm.

Pneumatic shaped cushion tyre			V							FV				FW				FSV						FSW								
8FBE15T	Tilt range, forward	deg	5	5	5	5	5	5	5	5	5	5	5	5	5	5	5	5	5	5	5	5	5	5	5	5	5	5	5	5	5	5
	Tilt range, backward	deg	7(5)	7(5)	7(5)	7(5)	7(5)	7(5)	7(5)	7(5)	7(5)	7(5)	7(5)	7(5)	7(5)	7(5)	7(5)	7(5)	7(5)	7(5)	7(5)	7(5)	5	7(5)	7(5)	7(5)	7(5)	7(5)	5	5	5	5
	Load capacity at 500 mm LC	kg	1500	1500	1500	1500	1500	1500	1450	1500	1500	1500	1500	1500	1500	1500	1500	1470	1440	1420	1390	1340	1150	1470	1440	1420	1390	1340	1150	850	650	450
8FBEK16T	Tilt range, forward	deg	5	5	5	5	5	5	5	5	5	5	5	5	5	5	5	5	5	5	5	5	5	5	5	5	5	5	5	5	5	5
	Tilt range, backward	deg	7(5)	7(5)	7(5)	7(5)	7(5)	7(5)	7(5)	7(5)	7(5)	7(5)	7(5)	7(5)	7(5)	7(5)	7(5)	7(5)	7(5)	7(5)	7(5)	7(5)	5	7(5)	7(5)	7(5)	7(5)	7(5)	5	5	5	5
	Load capacity at 500 mm LC	kg	1600	1600	1600	1600	1600	1600	1600	1600	1600	1600	1600	1600	1600	1600	1600	1600	1550	1530	1500	1450	1300	1600	1550	1530	1500	1450	1300	1000	750	550
8FBE16T	Tilt range, forward	deg	5	5	5	5	5	5	5	5	5	5	5	5	5	5	5	5	5	5	5	5	5	5	5	5	5	5	5	5	5	5
	Tilt range, backward	deg	7(5)	7(5)	7(5)	7(5)	7(5)	7(5)	7(5)	7(5)	7(5)	7(5)	7(5)	7(5)	7(5)	7(5)	7(5)	7(5)	7(5)	7(5)	7(5)	7(5)	5	7(5)	7(5)	7(5)	7(5)	7(5)	5	5	5	5
	Load capacity at 500 mm LC	kg	1600	1600	1600	1600	1600	1600	1550	1600	1600	1600	1600	1600	1600	1600	1600	1600	1600	1560	1510	1400	1300	1600	1600	1560	1510	1400	1300	1000	750	550

Data in ( ) are for when ”Cabin Series” is selected (minimum front windshield).

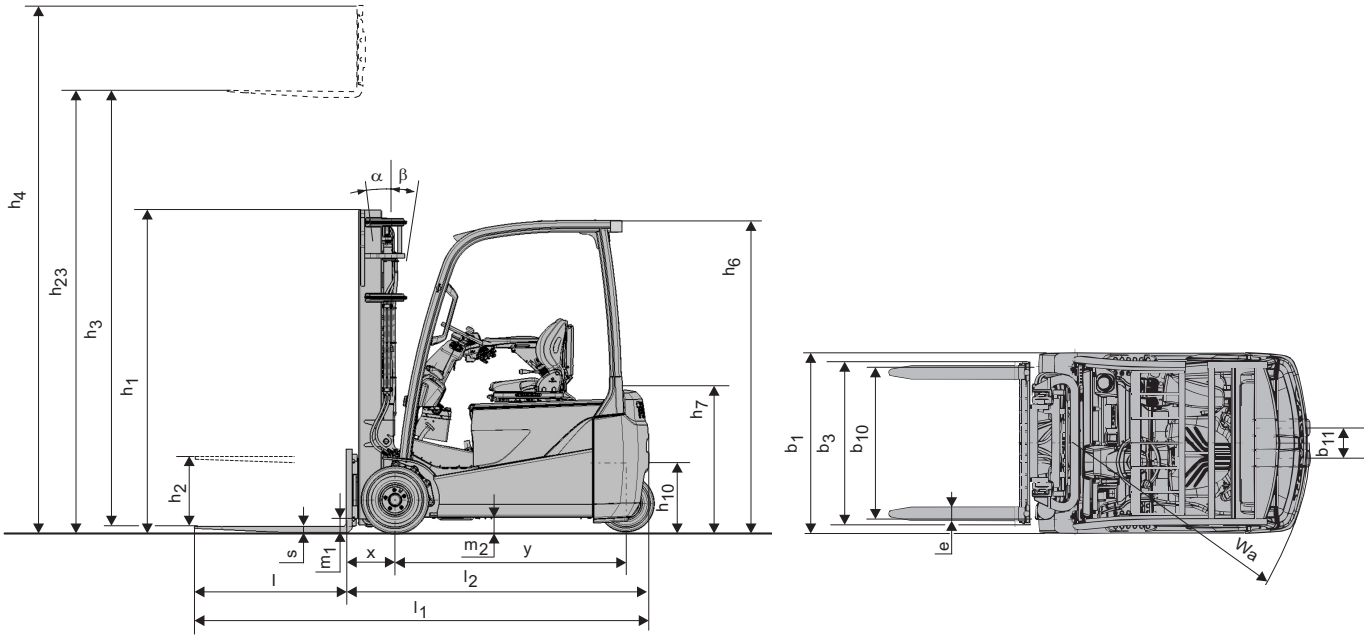

Electric powered forklift 1.8 ton

Truck specifications					8FBEK18T	8FBE18T
Identification	1.1	Manufacturer			TOYOTA	TOYOTA
	1.2	Model			8FBEK18T	8FBE18T
	1.3	Drive			Electric	Electric
	1.4	Operator type			Rider seated	Rider seated
	1.5	Load capacity/rated load	Q	kg	1800	1800
	1.6	Load centre	c	mm	500	500
	1.8	Load distance, centre of drive axle to fork	x	mm	317	317
	1.9	Wheelbase	Y	mm	1413	1521
Weight	2.1	Service weight			3119	3135
	2.2	Axle load, with load, front/rear			4390/529	4391/544
	2.3	Axle load, without load, front/rear			1497/1622	1571/1564
Tyres	3.1	Tyre - pneumatic (P), pneumatic shaped cushion (SE), solid rubber (R)			SE	SE
	3.2	Tyre size, front			18x7-8	18x7-8
	3.3	Tyre size, rear			140/55-9	140/55-9
	3.5	Wheels, number front/rear (x=driven wheels)			2x/2	2x/2
	3.6	Track width, front	b_{10}	mm	905	905
	3.7	Track width, rear	b_{11}	mm	186,2	186,2
Dimensions	4.1	Tilt of mast/fork carriage forward/backward	α/β	deg	5/7	5/7
	4.2	Height, mast lowered	h_1	mm	2120	2120
	4.3	Free lift	h_2	mm	115	115
	4.4	Lift	h_3	mm	3265	3265
		Lift height	h_{23}	mm	3300	3300
	4.5	Height, mast extended	h_4	mm	3870	3870
	4.7	Height of overhead guard (cab)	h_6	mm	2055	2055
	4.8	Seat height/stand height	h_7	mm	954	954
	4.12	Coupling height	h_{10}	mm	543	543
	4.19	Overall length	l_1	mm	2880	2988
	4.20	Length to face of forks	l_2	mm	1880	1988
	4.21	Overall width	b_1	mm	1060	1060
	4.22	Fork dimensions	s/e/l	mm	35/100/1000	35/100/1000
	4.23	Fork carriage DIN 15 173, class/type A, B			IIA	IIA
	4.24	Fork-carriage width	b_3	mm	920	920
	4.31	Ground clearance, with load, below mast	m_1	mm	80	80
	4.32	Ground clearance, centre of wheelbase	m_2	mm	90	90
	4.33	Aisle width for pallets 1000 x 1200 crossways	A_{st}	mm	3210	3318
	4.34	Aisle width for pallets 800 x 1200 lengthways	A_{st}	mm	3331	3440
	4.35	Turning radius	W_a	mm	1563	1671
	4.36	Internal turning radius	b_{13}	mm	0	0
Performance data	5.1	Travel speed, with/without load		km/h	16/16	16/16
	5.2	Lift speed, with/without load		m/s	0,42/0,61	0,42/0,61
	5.3	Lowering speed, with/without load		m/s	0,53/0,55	0,53/0,55
	5.5	Drawbar pull, with/without load		N	4979/5126	4986/5133
	5.6	Max. drawbar pull, with/without load		N	9429/9392	9437/9399
	5.7	Gradeability, with/without load		%	15,0/22,1	15,1/24,1
	5.8	Max. gradeability, with/without load		%	20,5/22,1	20,7/24,1
	5.9	Acceleration time, with/without load		s	4,7/4,3	4,7/4,3
	5.10	Service brake			Hydraulic	Hydraulic
Electric motor	6.1	Drive motor rating S2 60 min		kW	6x2	6x2
	6.2	Lift motor rating S3 15%		kW	11	11
	6.3	Battery acc. to DIN 43 531/35/36 A, B, C, no			43 531A	43 531A
	6.4	Battery voltage, nominal capacity K5		V/Ah	48/550-625	48/660-750
	6.5	Battery weight		kg	856	1013
	6.6	Energy consumption to VDI cycle		kWh/h	4,7	5,0
Others	8.1	Type of drive control			inverter MOSFET	inverter MOSFET
	8.2	Operating pressure for attachments		bar	183	183
	8.3	Oil volume for attachments		l/min	41,3	41,3
	8.4	Sound level at the driver's ear according to EN 12 053		dB(A)	69,7	69,7

Performance data and dimensions are nominal and subject to tolerances.
Specifications are subject to change without notice.
Please obtain the latest specifications before contracting products.

Mast dimensions and rated capacities

Model			V							FV				FW				FSV						FSW								
8FBEK18T/8FBE18T	Lift height	h_{23}	3000	3300	3500	3700	4000	4500	5000	3000	3300	3500	3700	3000	3300	3500	3700	4300	4500	4700	5000	5500	6000	4300	4500	4700	5000	5500	6000	6500	7000	7500
	Lift	h_3	2965	3265	3465	3665	3965	4465	4965	2965	3265	3465	3665	2965	3265	3465	3665	4265	4465	4665	4965	5465	5965	4265	4465	4665	4965	5465	5965	6465	6965	7465
	Height, mast lowered	h_1	1970	2120	2220	2380	2570	2820	3070	1970	2120	2220	2380	2000	2150	2250	2350	1970	2040	2120	2220	2380	2570	1980	2050	2150	2250	2450	2600	2800	3000	3200
	Height, mast extended [1]	h_4	3570	3870	4070	4270	4570	5070	5570	3580	3880	4080	4280	3555	3855	4055	4255	4845	5045	5245	5545	6045	6545	4845	5045	5245	5545	6045	6545	7045	7545	8045
	Height, mast extended [2]	h_4	4260	4560	4760	4960	5260	5760	6260	4260	4560	4760	4960	4260	4560	4760	4960	5560	5760	5960	6260	6760	7260	5560	5760	5960	6260	6760	7260	7760	8260	8760
	Free lift, without load backrest	h_2	115	115	115	115	115	115	115	1425	1575	1675	1835	1485	1635	1735	1835	1450	1520	1600	1700	1860	2050	1475	1545	1645	1745	1945	2095	2295	2495	2695
	Free lift, with load backrest	h_2	115	115	115	115	115	115	115	745	895	995	1155	780	930	1030	1130	745	815	895	995	1155	1345	760	830	930	1030	1230	1380	1580	1780	1980

1) Without load backrest

2) With load backrest; Height of standard load backrest is 1220 mm.

Pneumatic shaped cushion tyre			V							FV				FW				FSV						FSW								
8FBEK18T	Tilt range, forward	deg	5	5	5	5	5	5	5	5	5	5	5	5	5	5	5	5	5	5	5	5	5	5	5	5	5	5	5	5	5	5
	Tilt range, backward	deg	7(5)	7(5)	7(5)	7(5)	7(5)	7(5)	7(5)	7(5)	7(5)	7(5)	7(5)	7(5)	7(5)	7(5)	7(5)	7(5)	7(5)	7(5)	7(5)	7(5)	5	7(5)	7(5)	7(5)	7(5)	7(5)	5	5	5	5
	Load capacity at 500 mm LC	kg	1800	1800	1800	1800	1800	1700	1600	1800	1800	1800	1800	1800	1800	1800	1800	1750	1720	1700	1620	1500	1350	1750	1720	1700	1620	1500	1350	1050	800	550
8FBE18T	Tilt range, forward	deg	5	5	5	5	5	5	5	5	5	5	5	5	5	5	5	5	5	5	5	5	5	5	5	5	5	5	5	5	5	5
	Tilt range, backward	deg	7(5)	7(5)	7(5)	7(5)	7(5)	7(5)	7(5)	7(5)	7(5)	7(5)	7(5)	7(5)	7(5)	7(5)	7(5)	7(5)	7(5)	7(5)	7(5)	7(5)	5	7(5)	7(5)	7(5)	7(5)	7(5)	5	5	5	5
	Load capacity at 500 mm LC	kg	1800	1800	1800	1800	1800	1750	1700	1800	1800	1800	1800	1800	1800	1800	1800	1700	1700	1650	1650	1500	1300	1750	1700	1650	1650	1500	1300	1000	800	550

Data in ( ) are for when "Cabin Series" is selected (minimum front windshield).

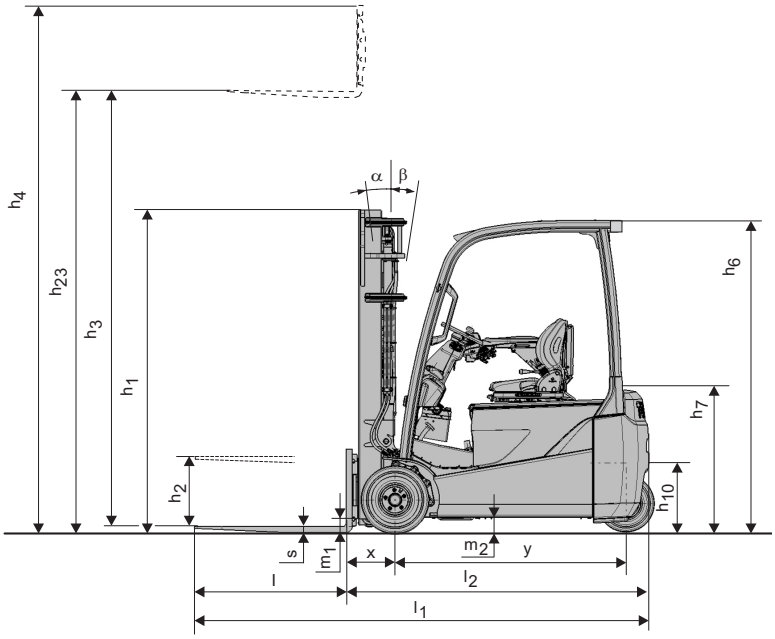

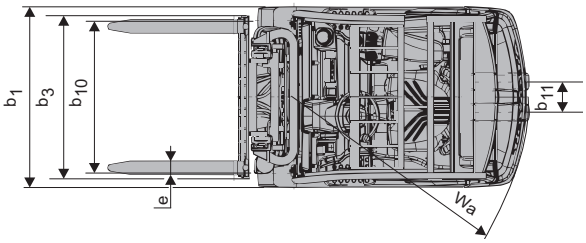

Electric powered forklift 2.0 ton

Truck specifications					8FBE20T
Identification	1.1	Manufacturer			TOYOTA
	1.2	Model			8FBE20T
	1.3	Drive			Electric
	1.4	Operator type			Rider seated
	1.5	Load capacity/rated load	Q	kg	2000
	1.6	Load centre	c	mm	500
	1.8	Load distance, centre of drive axle to fork	x	mm	317
	1.9	Wheelbase	y	mm	1521
Weight	2.1	Service weight			3342
	2.2	Axle load, with load, front/rear			4746/596
	2.3	Axle load, without load, front/rear			1619/1723
Tyres	3.1	Tyre - pneumatic (P), pneumatic shaped cushion (SE), solid rubber (R)			SE
	3.2	Tyre size, front			200/50-10
	3.3	Tyre size, rear			140/55-9
	3.5	Wheels, number front/rear (x=driven wheels)			2x/2
	3.6	Track width, front	b_{10}	mm	925
	3.7	Track width, rear	b_{11}	mm	186,2
Dimensions	4.1	Tilt of mast/fork carriage forward/backward	α/β	deg	5/7
	4.2	Height, mast lowered	h_1	mm	2120
	4.3	Free lift	h_2	mm	115
	4.4	Lift	h_3	mm	3265
		Lift height	h_{23}	mm	3300
	4.5	Height, mast extended	h_4	mm	3870
	4.7	Height of overhead guard (cab)	h_6	mm	2055
	4.8	Seat height/stand height	h_7	mm	962
	4.12	Coupling height	h_{10}	mm	543
	4.19	Overall length	l_1	mm	2988
	4.20	Length to face of forks	l_2	mm	1988
	4.21	Overall width	b_1	mm	1152
	4.22	Fork dimensions	s/e/l	mm	35/120/1000
	4.23	Fork carriage DIN 15 173, class/type A, B			IIA
	4.24	Fork-carriage width	b_3	mm	920
	4.31	Ground clearance, with load, below mast	m_1	mm	90
	4.32	Ground clearance, centre of wheelbase	m_2	mm	97
	4.33	Aisle width for pallets 1000 x 1200 crossways	A_{st}	mm	3318
	4.34	Aisle width for pallets 800 x 1200 lengthways	A_{st}	mm	3440
	4.35	Turning radius	W_a	mm	1671
	4.36	Internal turning radius	b_{13}	mm	0
Performance data	5.1	Travel speed, with/without load		km/h	16/16
	5.2	Lift speed, with/without load		m/s	0,38/0,54
	5.3	Lowering speed, with/without load		m/s	0,52/0,50
	5.5	Drawbar pull, with/without load		N	4839/5046
	5.6	Max. drawbar pull, with/without load		N	9145/9188
	5.7	Gradeability, with/without load		%	13,2/24,4
	5.8	Max. gradeability, with/without load		%	18,0/24,4
	5.9	Acceleration time, with/without load		s	4,7/4,3
	5.10	Service brake			Hydraulic
Electric motor	6.1	Drive motor rating S2 60 min		kW	6x2
	6.2	Lift motor rating S3 15%		kW	11
	6.3	Battery acc. to DIN 43 531/35/36 A, B, C, no			43 531A
	6.4	Battery voltage, nominal capacity K5		V/Ah	48/660-750
	6.5	Battery weight		kg	1013
	6.6	Energy consumption to VDI cycle		kWh/h	6,1
Others	8.1	Type of drive control			inverter MOSFET
	8.2	Operating pressure for attachments		bar	183
	8.3	Oil volume for attachments		l/min	41,3
	8.4	Sound level at the driver's ear according to EN 12 053		dB(A)	69,7

Performance data and dimensions are nominal and subject to tolerances.
Specifications are subject to change without notice.
Please obtain the latest specifications before contracting products.

Mast dimensions and rated capacities

Model			V							FV				FW				FSV						FSW								
8FBE20T	Lift height	h_{23}	3000	3300	3500	3700	4000	4500	5000	3000	3300	3500	3700	3000	3300	3500	3700	4300	4500	4700	5000	5500	6000	4300	4500	4700	5000	5500	6000	6500	7000	7500
	Lift	h_3	2965	3265	3465	3665	3965	4465	4965	2965	3265	3465	3665	2965	3265	3465	3665	4265	4465	4665	4965	5465	5965	4265	4465	4665	4965	5465	5965	6465	6965	7465
	Height, mast lowered	h_1	1970	2120	2220	2380	2570	2820	3070	1970	2120	2220	2380	2000	2150	2250	2350	1970	2040	2120	2220	2380	2570	1980	2050	2150	2250	2450	2600	2800	3000	3200
	Height, mast extended [1]	h_4	3570	3870	4070	4270	4570	5070	5570	3580	3880	4080	4280	3555	3855	4055	4255	4845	5045	5245	5545	6045	6545	4845	5045	5245	5545	6045	6545	7045	7545	8045
	Height, mast extended [2]	h_4	4260	4560	4760	4960	5260	5760	6260	4260	4560	4760	4960	4260	4560	4760	4960	5560	5760	5960	6260	6760	7260	5560	5760	5960	6260	6760	7260	7760	8260	8760
	Free lift, without load backrest	h_2	115	115	115	115	115	115	115	1425	1575	1675	1835	1485	1635	1735	1835	1450	1520	1600	1700	1860	2050	1475	1545	1645	1745	1945	2095	2295	2495	2695
	Free lift, with load backrest	h_2	115	115	115	115	115	115	115	745	895	995	1155	780	930	1030	1130	745	815	895	995	1155	1345	760	830	930	1030	1230	1380	1580	1780	1980

1) Without load backrest

2) With load backrest; Height of standard load backrest is 1220 mm.

Pneumatic shaped cushion tyre			V							FV				FW				FSV						FSW								
8FBE20T	Tilt range, forward	deg	5	5	5	5	5	5	5	5	5	5	5	5	5	5	5	5	5	5	5	5	5	5	5	5	5	5	5	5	5	5
	Tilt range, backward	deg	7(5)	7(5)	7(5)	7(5)	7(5)	7(5)	7(5)	7(5)	7(5)	7(5)	7(5)	7(5)	7(5)	7(5)	7(5)	7(5)	7(5)	7(5)	7(5)	7(5)	5	7(5)	7(5)	7(5)	7(5)	7(5)	5	5	5	5
	Load capacity at 500 mm LC	kg	2000	2000	2000	2000	2000	2000	1950	2000	2000	2000	2000	2000	2000	2000	2000	1950	1920	1900	1800	1650	1550	1950	1920	1900	1850	1750	1550	1250	1000	800

Data in ( ) are for when ”Cabin Series” is selected (minimum front windshield).

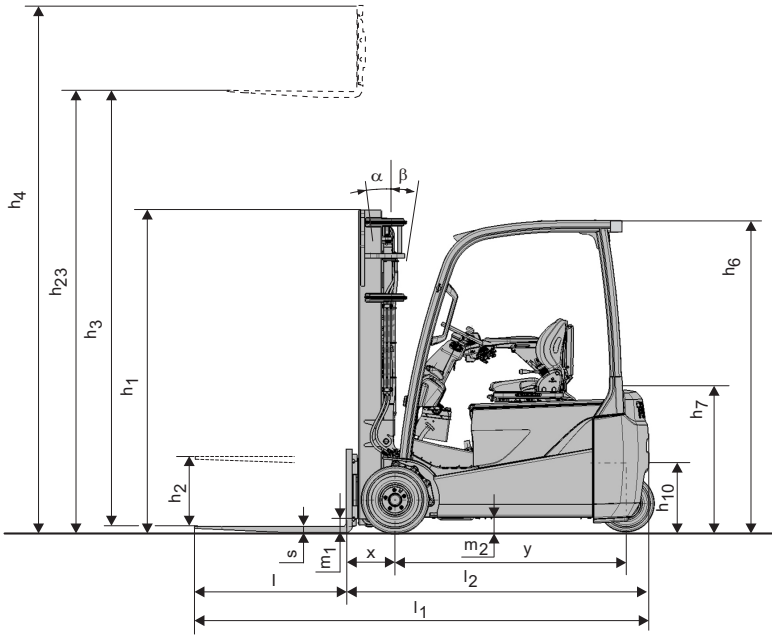

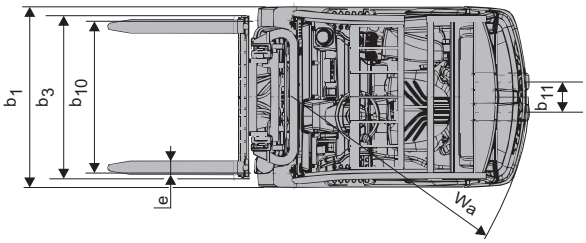

Standard equipments:

- Toyota SAS (System of Active Stability)
- Toyota AC² power system
- Toyota ORS seat (Operator Restraint System)
- Seat mounted hydraulic minilevers
- Direction switch on armrest
- Wide visible mast (V3300 mm)
- Long forks (length:1000 mm)
- Long forkbar (length: 920 mm)
- 3 way valves (A400)
- Automatic parking brake
- Wet disc brakes
- Wide brake pedal
- Pneumatic shaped cushion tyres
- Electric power steering
- Digital Multifunction display with wheel indicator
- Adjustable tilt steering column with memory function

TP-Technical Publications, Sweden — 745555-040, version 4, 1510