Electric powered forklift 2.0 - 5.0 ton

IFOY AWARD
forklift truck
of the year 2014

TRIGO 80

TOYOTA

MATERIAL HANDLING

www.toyota-forklifts.eu

Electric powered forklift 2.0 - 2.5 ton

Truck specifications					8FBMKT20	8FBMKT25	8FBMT25
Identification	1.1	Manufacturer			TOYOTA	TOYOTA	TOYOTA
	1.2	Model			8FBMKT20	8FBMKT25	8FBMT25
	1.3	Drive			Electric	Electric	Electric
	1.4	Operator type			Rider seated	Rider seated	Rider seated
	1.5	Load capacity/rated load	Q	kg	2000	2500	2500
	1.6	Load centre	c	mm	500	500	500
	1.8	Load distance, centre of drive axle to fork	x	mm	420	420	420
	1.9	Wheelbase	y	mm	1431	1575	1720
Weight	2.1	Service weight		kg	4198	4553	4809
	2.2	Axle load, with load, front/rear		kg	5358/841	6201/852	6253/1056
	2.3	Axle load, without load, front/rear		kg	2072/2126	2241/2312	2415/2394
Tyres	3.1	Tyre - pneumatic (P), pneumatic shaped cushion (SE), solid rubber (R)			SE	SE	SE
	3.2	Tyre size, front			23x9-10	23x9-10	23x9-10
	3.3	Tyre size, rear			18x7-8	18x7-8	18x7-8
	3.5	Wheels, number front/rear (x=driven wheels)			2x/2	2x/2	2x/2
	3.6	Track width, front	b_{10}	mm	986	986	986
	3.7	Track width, rear	b_{11}	mm	940	940	940
Dimensions	4.1	Tilt of mast/fork carriage forward/backward	α/β	deg	5/8	5/8	5/8
	4.2	Height, mast lowered	h_1	mm	2235	2235	2235
	4.3	Free lift	h_2	mm	120	120	120
	4.4	Lift	h_3	mm	3300	3300	3300
		Lift height	h_{23}	mm	3340	3340	3340
	4.5	Height, mast extended	h_4	mm	3999	3999	3999
	4.7	Height of overhead guard (cab)	h_6	mm	2215	2215	2215
	4.8	Seat height/stand height	h_7	mm	1143	1143	1143
	4.12	Coupling height	h_{10}	mm	500	500	500
	4.19	Overall length	l_1	mm	3140	3284	3429
	4.20	Length to face of forks	l_2	mm	2140	2284	2429
	4.21	Overall width	b_1	mm	1195	1195	1195
	4.22	Fork dimensions	s/e/l	mm	40/100/1000	40/100/1000	40/100/1000
	4.23	Fork carriage DIN 15 173, class/type A, B			IIA	IIA	IIA
	4.24	Fork-carriage width	b_3	mm	1070	1070	1070
	4.31	Ground clearance, with load, below mast	m_1	mm	95	95	95
	4.32	Ground clearance, centre of wheelbase	m_2	mm	127	127	127
	4.33	Aisle width for pallets 1000 x 1200 crossways	A_{st}	mm	3495	3625	3759
	4.34	Aisle width for pallets 800 x 1200 lengthways	A_{st}	mm	3692	3823	3958
	4.35	Turning radius	W_a	mm	1872	2003	2138
	4.36	Internal turning radius	b_{13}	mm	504	518	532
Performance data	5.1	Travel speed, with/without load		km/h	19/20	19/20	19/20
	5.2	Lift speed, with/without load		m/s	0,50/0,63	0,46/0,63	0,46/0,63
	5.3	Lowering speed, with/without load		m/s	0,56/0,45	0,56/0,48	0,56/0,48
	5.5	Drawbar pull, with/without load		N	8900	8900	8900
	5.6	Max. drawbar pull, with/without load		N	19000	19000	19000
	5.7	Gradeability, with/without load		%	19/29	16/28	15/25
	5.8	Max. gradeability, with/without load		%	27/29	25/29	24/29
	5.9	Acceleration time, with/without load		s	4,4/4,2	4,5/4,2	4,6/4,2
	5.10	Service brake			Mechanical/hydraulic	Mechanical/hydraulic	Mechanical/hydraulic
Electric motor	6.1	Drive motor rating S2 60 min		kW	20	20	20
	6.2	Lift motor rating S3 15%		kW	25,5	25,5	25,5
	6.3	Battery acc. to DIN 43 531/35/36 A, B, C, no			43536 A	43536 A	43536 A
	6.4	Battery voltage, nominal capacity K5		V/Ah	80/420	80/560	80/700
	6.5	Battery weight		kg	1238	1558	1863
Others	8.1	Type of drive control			AC	AC	AC
	8.2	Operating pressure for attachments		bar	160	160	160
	8.3	Oil volume for attachments		l/min	40	40	40
	8.4	Sound level at the driver's ear according to EN 12 053		dB(A)	68,8	68,8	68,8

Performance data and dimensions are nominal and subject to tolerances.
Specifications are subject to change without notice.
Please obtain the latest specifications before contracting products.

Mast dimensions and rated capacities

Model			V					FV				FW				FSV						FSW					
8FBMKT20, 8FBMKT25, 8FBMT25	Lift height	h_{23}	3040	3340	3740	4040	4540	3040	3340	3740	4040	3040	3340	3740	4040	4340	4740	5040	5540	6040	6540	4400	4740	5040	5540	6040	6540
	Lift	h_3	3000	3300	3700	4000	4500	3000	3300	3700	4000	3000	3300	3700	4000	4300	4700	5000	5500	6000	6500	4360	4700	5000	5500	6000	6500
	Height, mast lowered	h_1	2135	2235	2585	2835	3085	2135	2235	2585	2835	2135	2255	2505	2655	2135	2235	2395	2585	2835	3085	2085	2205	2305	2505	2655	2855
	Height, mast extended 1)	h_4	3699	3999	4399	4699	5199	3674	3974	4374	4674	3595	3895	4365	4605	4999	5399	5699	6199	6699	7199	4965	5305	5605	6105	6605	7105
	Height, mast extended 2)	h_4	4200	4500	4900	5200	5700	4200	4500	4900	5200	4200	4500	4900	5200	5500	5900	6200	6700	7200	7700	5560	5900	6200	6700	7200	7700
	Free lift, without load backrest	h_2	120	120	120	120	120	1511	1611	1961	2211	1540	1660	1840	2050	1476	1576	1736	1926	2176	2426	1480	1600	1700	1900	2050	2250
	Free lift, with load backrest	h_2	120	120	120	120	120	985	1085	1435	1685	935	1055	1305	1455	975	1075	1235	1425	1675	1925	885	1005	1105	1305	1455	1655

1) Without load backrest.

2) With load backrest; Height of standard load backrest is 1200 mm.

Pneumatic shaped cushion tyre			V					FV				FW				FSV						FSW					
8FBMKT20	Tilt range, forward	deg	4,5	4,5	4,5	4,5	4,5	4,5	4,5	4,5	4,5	4,5	4,5	4,5	4,5	4,5	4,5	4,5	4,5	4,5	4,5	4,5	4,5	4,5	4,5	4,5	4,5
	Tilt range, backward	deg	8	8	8	8	6	8	8	8	8	8	8	8	8	6	6	6	6	6	6	6	6	6	6	6	6
	Load capacity at 500 mm LC	kg	2000	2000	2000	2000	2000	2000	2000	2000	2000	2000	2000	2000	2000	2000	2000	1985	1910	1710	1355	2000	2000	1980	1910	1710	1355
8FBMKT25	Tilt range, forward	deg	4,5	4,5	4,5	4,5	4,5	4,5	4,5	4,5	4,5	4,5	4,5	4,5	4,5	4,5	4,5	4,5	4,5	4,5	4,5	4,5	4,5	4,5	4,5	4,5	4,5
	Tilt range, backward	deg	8	8	8	8	6	8	8	8	8	8	8	8	8	6	6	6	6	6	6	6	6	6	6	6	6
	Load capacity at 500 mm LC	kg	2500	2500	2500	2500	2500	2500	2500	2500	2500	2500	2500	2500	2500	2480	2420	2380	2080	1660	1400	2480	2420	2380	2080	1660	1400
8FBMT25	Tilt range, forward	deg	4,5	4,5	4,5	4,5	4,5	4,5	4,5	4,5	4,5	4,5	4,5	4,5	4,5	4,5	4,5	4,5	4,5	4,5	4,5	4,5	4,5	4,5	4,5	4,5	4,5
	Tilt range, backward	deg	8	8	8	8	6	8	8	8	8	8	8	8	8	6	6	6	6	6	6	6	6	6	6	6	6
	Load capacity at 500 mm LC	kg	2500	2500	2500	2500	2500	2500	2500	2500	2500	2500	2500	2500	2500	2500	2500	2500	2500	2000	1950	2500	2500	2500	2500	2000	1950

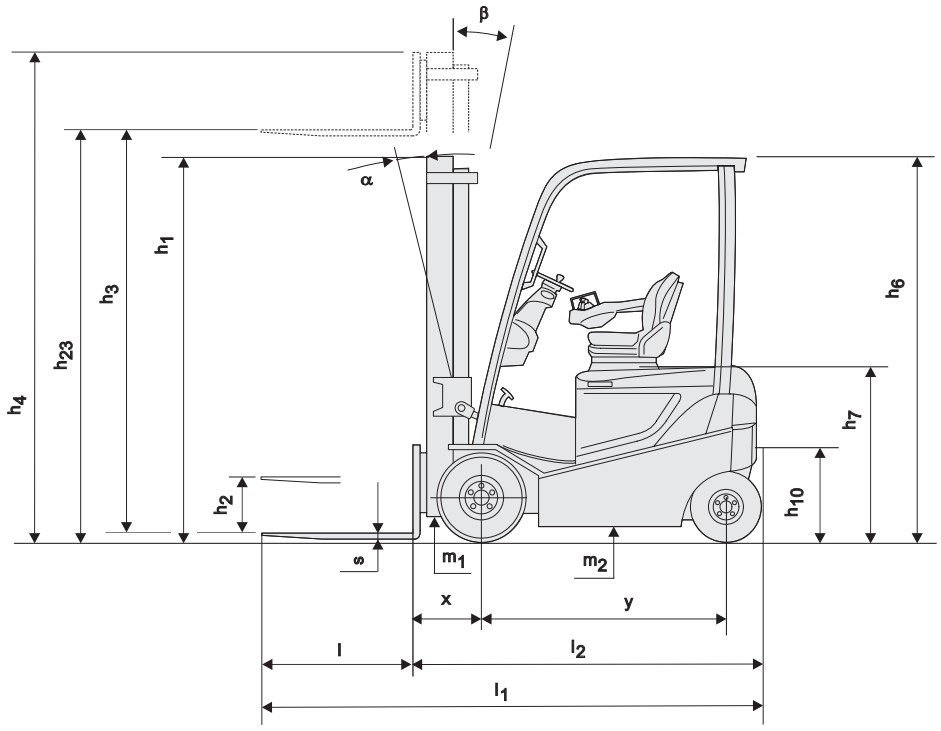

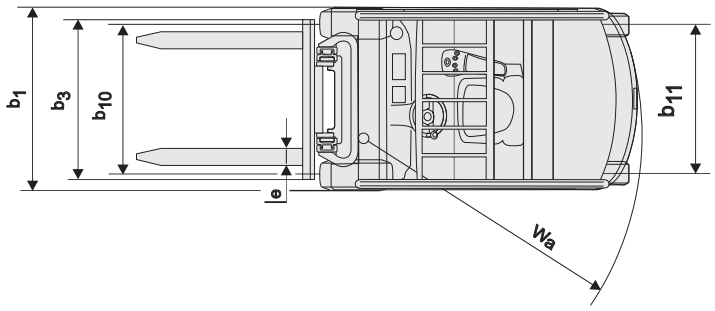

Electric powered forklift 3.0 - 3.5 ton

Truck specifications					8FBMKT30	8FBMT30	8FBMT35
Identification	1.1	Manufacturer			TOYOTA	TOYOTA	TOYOTA
	1.2	Model			8FBMKT30	8FBMT30	8FBMT35
	1.3	Drive			Electric	Electric	Electric
	1.4	Operator type			Rider seated	Rider seated	Rider seated
	1.5	Load capacity/rated load	Q	kg	3000	3000	3500
	1.6	Load centre	c	mm	500	500	500
	1.8	Load distance, centre of drive axle to fork	x	mm	440	440	440
	1.9	Wheelbase	y	mm	1575	1720	1720
Weight	2.1	Service weight		kg	5199	5161	5593
	2.2	Axle load, with load, front/rear		kg	7236/964	7280/881	8048/1045
	2.3	Axle load, without load, front/rear		kg	2443/2756	2638/2524	2632/2961
Tyres	3.1	Tyre: C=Cushion, SE=Super elastic, PN=Pneumatic, TW=Twin			SE	SE	SE
	3.2	Tyre size, front			23x10-12	23x10-12	23x10-12
	3.3	Tyre size, rear			18x7-8	18x7-8	18x7-8
	3.5	Wheels, number front/rear (x=driven wheels)			2x/2	2x/2	2 / 2
	3.6	Track width, front	b_{10}	mm	946	946	946
	3.7	Track width, rear	b_{11}	mm	940	940	940
Dimensions	4.1	Tilt of mast/fork carriage forward/backward	α/β	deg	5/8	5/8	5/8
	4.2	Height, mast lowered	h_1	mm	2395	2395	2395
	4.3	Free lift	h_2	mm	125	125	125
	4.4	Lift	h_3	mm	3300	3300	3300
		Lift height	h_{23}	mm	3345	3345	3345
	4.5	Height, mast extended	h_4	mm	4045	4045	4045
	4.7	Height of overhead guard (cab)	h_6	mm	2215	2215	2215
	4.8	Seat height/stand height	h_7	mm	1143	1143	1143
	4.12	Coupling height	h_{10}	mm	500	500	500
	4.19	Overall length	l_1	mm	3334	3449	3479
	4.20	Length to face of forks	l_2	mm	2334	2449	2479
	4.21	Overall width	b_1	mm	1195	1195	1195
	4.22	Fork dimensions	s/e/l	mm	45/100/1000	45/100/1000	45/125/1000
	4.23	Fork carriage DIN 15 173, class/type A, B			IIIA	IIIA	IIIA
	4.24	Fork-carriage width	b_3	mm	1070	1070	1070
	4.31	Ground clearance, with load, below mast	m_1	mm	95	95	95
	4.32	Ground clearance, centre of wheelbase	m_2	mm	127	127	127
	4.33	Aisle width for pallets 1000 x 1200 crossways	A_{st}	mm	3674	3779	3808
	4.34	Aisle width for pallets 800 x 1200 lengthways	A_{st}	mm	3872	3978	4007
	4.35	Turning radius	W_a	mm	2032	2138	2167
	4.36	Internal turning radius	b_{13}	mm	518	532	532
Performance data	5.1	Travel speed, with/without load		km/h	19/20	19/20	19/20
	5.2	Lift speed, with/without load		m/s	0,40/0,55	0,40/0,55	0,37/0,55
	5.3	Lowering speed, with/without load		m/s	0,56/0,45	0,56/0,45	0,56/0,45
	5.5	Drawbar pull, with/without load		N	8900	8900	8900
	5.6	Max. drawbar pull, with/without load		N	19000	19000	19000
	5.7	Gradeability, with/without load		%	13/23	13/23	11/21
	5.8	Max. gradeability, with/without load		%	21/29	22/29	19/27
	5.9	Acceleration time, with/without load		s	4,7/4,2	4,8/4,2	4,9/4,3
	5.10	Service brake			Mechanical/hydraulic	Mechanical/hydraulic	Mechanical/hydraulic
Electric motor	6.1	Drive motor rating S2 60 min		kW	20	20	20
	6.2	Lift motor rating S3 15%		kW	25,5	25,5	25,5
	6.3	Battery acc. to DIN 43 531/35/36 A, B, C, no			43536 A	43536 A	43536 A
	6.4	Battery voltage, nominal capacity K5		V/Ah	80/560	80/700	80/700
	6.5	Battery weight		kg	1558	1863	1863
Others	8.1	Type of drive control			AC	AC	AC
	8.2	Operating pressure for attachments		bar	160	160	160
	8.3	Oil volume for attachments		l/min	40	40	40
	8.4	Sound level at the driver's ear according to EN 12 053		dB(A)	68,8	68,8	68,8

Performance data and dimensions are nominal and subject to tolerances.
Specifications are subject to change without notice.
Please obtain the latest specifications before contracting products.

Mast dimensions and rated capacities

Model			V					FV				FW				FSV						FSW					
8FBMKT30, 8FBMT30	Lift height	h_{23}	3005	3345	3745	4045	4545	3045	3345	3745	4045	3045	3345	3745	4045	4345	4745	5045	5545	6045	6545	4395	4745	5045	5545	6045	6545
	Lift	h_3	2960	3300	3700	4000	4500	3000	3300	3700	4000	3000	3300	3700	4000	4300	4700	5000	5500	6000	6500	4350	4700	5000	5500	6000	6500
	Height, mast lowered	h_1	2215	2395	2585	2835	3085	2125	2255	2585	2835	2185	2355	2555	2755	2135	2235	2395	2585	2835	3085	2185	2305	2405	2605	2755	2955
	Height, mast extended 1)	h_4	3705	4045	4445	4745	5245	3740	4040	4440	4740	3675	3955	4355	4615	4930	5320	5630	6130	6630	7130	5005	5355	5655	6155	6655	7255
	Height, mast extended 2)	h_4	4160	4500	4900	5200	5700	4200	4500	4900	5200	4200	4500	4900	5200	5500	5900	6200	6700	7200	7700	5550	5900	6200	6700	7200	7700
	Free lift, without load backrest	h_2	125	125	125	125	125	1395	1515	1845	1845	1510	1700	1900	2040	1550	1650	1810	2000	2250	2500	1530	1650	1750	1950	2100	2300
	Free lift, with load backrest	h_2	125	125	125	125	125	935	1055	1385	1385	985	1155	1355	1555	980	1080	1240	1430	1680	1930	985	1105	1205	1405	1555	1755
8FBMT35	Lift height	h_{23}	3005	3345	3745	4045	4545	3045	3345	3745	4045	3045	3345	3745	4045	4345	4745	5045	5545	6045	6545	4395	4745	5045	5545	6045	6545
	Lift	h_3	2960	3300	3700	4000	4500	3000	3300	3700	4000	3000	3300	3700	4000	4300	4700	5000	5500	6000	6500	4350	4700	5000	5500	6000	6500
	Height, mast lowered	h_1	2215	2395	2585	2835	3085	2125	2255	2585	2835	2185	2355	2555	2755	2215	2395	2585	2835	3085	3335	2185	2305	2405	2605	2755	2955
	Height, mast extended 1)	h_4	3705	4045	4445	4745	5245	3740	4040	4440	4740	3675	3955	4355	4615	5030	5430	5730	6230	6730	7230	5005	5355	5655	6155	6655	7255
	Height, mast extended 2)	h_4	4160	4500	4900	5200	5700	4200	4500	4900	5200	4200	4500	4900	5200	5500	5900	6200	6700	7200	7700	5550	5900	6200	6700	7200	7700
	Free lift, without load backrest	h_2	125	125	125	125	125	1395	1515	1845	1845	1510	1700	1900	2040	1530	1710	1900	2150	2400	2650	1530	1650	1750	1950	2100	2300
	Free lift, with load backrest	h_2	125	125	125	125	125	935	1055	1385	1385	985	1155	1355	1555	1060	1240	1430	1680	1930	2180	985	1105	1205	1405	1555	1755

1) Without load backrest.

2) With load backrest; Height of standard load backrest is 1200 mm.

Pneumatic shaped cushion tyre			V					FV				FW				FSV						FSW					
8FBMKT30	Tilt range, forward	deg	4,5	4,5	4,5	4,5	4,5	4,5	4,5	4,5	4,5	4,5	4,5	4,5	4,5	4,5	4,5	4,5	4,5	4,5	4,5	4,5	4,5	4,5	4,5	4,5	4,5
	Tilt range, backward	deg	8	8	8	8	6	8	8	8	8	8	8	8	8	6	6	6	6	6	6	6	6	6	6	6	6
	Load capacity at 500 mm LC	kg	3000	3000	3000	3000	3000	3000	3000	3000	3000	3000	3000	3000	3000	3000	2930	2880	2670	2165	1800	3000	2930	2880	2670	2165	1800
8FBMT30	Tilt range, forward	deg	4,5	4,5	4,5	4,5	4,5	4,5	4,5	4,5	4,5	4,5	4,5	4,5	4,5	4,5	4,5	4,5	4,5	4,5	4,5	4,5	4,5	4,5	4,5	4,5	4,5
	Tilt range, backward	deg	8	8	8	8	6	8	8	8	8	8	8	8	8	6	6	6	6	6	6	6	6	6	6	6	6
	Load capacity at 500 mm LC	kg	3000	3000	3000	3000	3000	3000	3000	3000	3000	3000	3000	3000	3000	2950	2900	2850	2670	2190	2080	2950	2900	2850	2670	2190	2080
8FBMT35	Tilt range, forward	deg	4,5	4,5	4,5	4,5	4,5	4,5	4,5	4,5	4,5	4,5	4,5	4,5	4,5	4,5	4,5	4,5	4,5	4,5	4,5	4,5	4,5	4,5	4,5	4,5	4,5
	Tilt range, backward	deg	8	8	8	8	6	8	8	8	8	8	8	8	8	6	6	6	6	6	6	6	6	6	6	6	6
	Load capacity at 500 mm LC	kg	3500	3500	3500	3500	3500	3300	3300	3300	3300	3300	3300	3300	3300	3500	3500	3440	3320	2790	2250	3500	3500	3440	3320	2790	2250

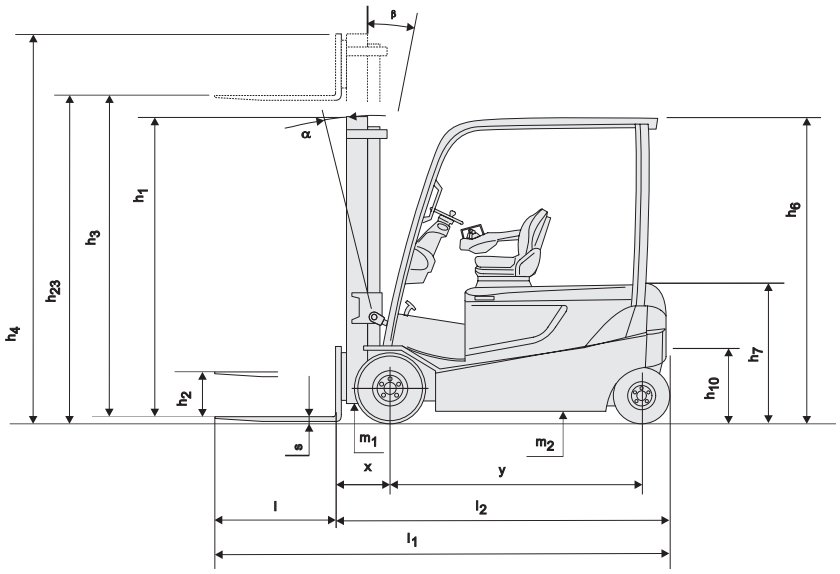

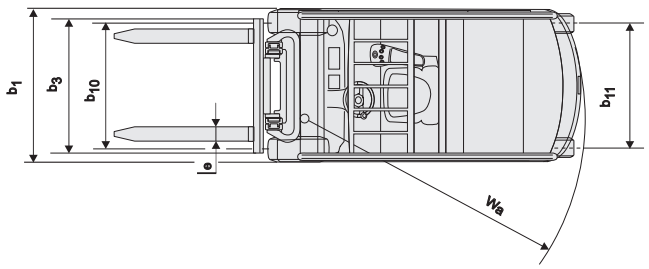

Electric powered forklift 4.0 - 5.0 ton

Truck specifications					8FBMT40	8FBMT45	8FBMT50
Identification	1.1	Manufacturer			TOYOTA	TOYOTA	TOYOTA
	1.2	Model			8FBMT40	8FBMT45	8FBMT50
	1.3	Drive			Electric	Electric	Electric
	1.4	Operator type			Rider seated	Rider seated	Rider seated
	1.5	Load capacity/rated load	Q	kg	4000	4500	4990
	1.6	Load centre	c	mm	500	500	600
	1.8	Load distance, centre of drive axle to fork	x	mm	518	518	528
	1.9	Wheelbase	y	mm	2030	2030	2030
Weight	2.1	Service weight		kg	6556	7086	7721
	2.2	Axle load, with load, front/rear		kg	9555 / 1102	10261 / 1325	11316 / 1406
	2.3	Axle load, without load, front/rear		kg	3558 / 3099	3515 / 3572	3548 / 4173
Tyres	3.1	Tyre: C=Cushion, SE=Super elastic, PN=Pneumatic, TW=Twin			SE	SE	SE
	3.2	Tyre size, front			250-15	250-15	28x12,5-15
	3.3	Tyre size, rear			23x9-10	23x9-10	23x9-10
	3.5	Wheels, number front/rear (x=driven wheels)			2 / 2	2 / 2	2 / 2
	3.6	Track width, front	b_{10}	mm	1119	1119	1145
	3.7	Track width, rear	b_{11}	mm	1113	1113	1113
Dimensions	4.1	Tilt of mast/fork carriage forward/backward	α/β	deg	5 / 10	5 / 10	5 / 10
	4.2	Height, mast lowered	h_1	mm	2500	2500	2500
	4.3	Free lift	h_2	mm	130	130	140
	4.4	Lift	h_3	mm	3300	3300	3300
		Lift height	h_{23}	mm	3350	3350	3360
	4.5	Height, mast extended	h_4	mm	4156	4156	4156
	4.7	Height of overhead guard (cab)	h_6	mm	2360	2360	2360
	4.8	Seat height/stand height	h_7	mm	1277	1277	1277
	4.12	Coupling height	h_{10}	mm	550	550	550
	4.19	Overall length	l_1	mm	3907	3947	4272
	4.20	Length to face of forks	l_2	mm	2907	2947	3072
	4.21	Overall width	b_1	mm	1345	1345	1440
	4.22	Fork dimensions	s/e/l	mm	50/150/1000	50/150/1000	60/150/1200
	4.23	Fork carriage DIN 15 173, class/type A, B			IIIA	IIIA	IIIA
	4.24	Fork-carriage width	b_3	mm	1170	1170	1170
	4.31	Ground clearance, with load, below mast	m_1	mm	150	150	150
	4.32	Ground clearance, centre of wheelbase	m_2	mm	145	145	145
	4.33	Aisle width for pallets 1000 x 1200 crossways	A_{st}	mm	4260	4276	4412
	4.34	Aisle width for pallets 800 x 1200 lengthways	A_{st}	mm	4460	4476	4612
	4.35	Turning radius	W_a	mm	2543	2558	2686
	4.36	Internal turning radius	b_{13}	mm	685	685	685
Performance data	5.1	Travel speed, with/without load		km/h	18/18	18/18	18/18
	5.2	Lift speed, with/without load		m/s	0,35/0,46	0,35/0,46	0,33/0,46
	5.3	Lowering speed, with/without load		m/s	0,55/0,46	0,55/0,46	0,55/0,46
	5.5	Drawbar pull, with/without load		N	12420	12420	12420
	5.6	Max. drawbar pull, with/without load		N	22000	22000	22000
	5.7	Gradeability, with/without load		%	11,3/17,0	9,5/16,8	8,8/15,8
	5.8	Max. gradeability, with/without load		%	15/25	14/24	13/23
	5.9	Acceleration time, with/without load		s	5,1/4,5	5,2/4,5	5,3/4,6
	5.10	Service brake			Mechanical/hydraulic	Mechanical/hydraulic	Mechanical/hydraulic
Electric motor	6.1	Drive motor rating S2 60 min		kW	25,2	25,2	25,2
	6.2	Lift motor rating S3 15%		kW	25,5	25,5	25,5
	6.3	Battery acc. to DIN 43 531/35/36 A, B, C, no			43536	43536	43536
	6.4	Battery voltage, nominal capacity K5		V/Ah	80 / 840	80 / 840	80 / 840
	6.5	Battery weight		kg	2178	2178	2178
Others	8.1	Type of drive control			AC	AC	AC
	8.2	Operating pressure for attachments		bar	160-180	160-180	160-180
	8.3	Oil volume for attachments		l/min	70	70	70
	8.4	Sound level at the driver's ear according to EN 12 053		dB(A)	68	68	68

Performance data and dimensions are nominal and subject to tolerances.
Specifications are subject to change without notice.
Please obtain the latest specifications before contracting products.

Mast dimensions and rated capacities

Model			V							FV/FW					FSV/FSW						
8FBMT40, 8FBMT45	Lift height	h_{23}	3050	3350	3750	4050	4550	5050	5550	—	3050	3350	3750	4050	—	4450	4750	5050	5550	6050	6550
	Lift	h_3	3000	3300	3700	4000	4500	5000	5500	—	3000	3300	3700	4000	—	4400	4700	5000	5500	6000	6500
	Height, mast lowered	h_1	2360	2500	2750	2880	3130	3380	3630	—	2360	2500	2750	2880	—	2360	2440	2500	2750	2880	3130
	Height, mast extended 1)	h_4	3856	4156	4560	4856	5356	5856	6356	—	3890	4190	4590	4890	—	5290	5590	5890	6390	6890	7390
	Height, mast extended 2)	h_4	4200	4500	4900	5200	5700	6200	6700	—	4200	4500	4900	5200	—	5600	5900	6200	6700	7200	7700
	Free lift, without load backrest	h_2	80	80	80	80	80	80	80	—	1470	1610	1860	1990	—	1470	1550	1610	1860	1990	2240
	Free lift, with load backrest	h_2	80	80	80	80	80	80	80	—	1160	1240	1300	1550	—	1160	1240	1300	1550	1680	1930
8FBMT50	Lift height	h_{23}	3060	3360	3760	4060	4560	5060	5560	2860	—	3360	3760	4060	4360	—	4760	5060	5560	6060	6560
	Lift	h_3	3000	3300	3700	4000	4500	5000	5500	2800	—	3300	3700	4000	4300	—	4700	5000	5500	6000	6500
	Height, mast lowered	h_1	2360	2500	2750	2880	3130	3380	3630	2360	—	2630	2880	3130	2360	—	2500	2630	2880	3130	3380
	Height, mast extended 1)	h_4	3956	4156	4560	4856	5356	5856	6356	3690	—	4190	4590	4890	5190	—	5590	5890	6390	6890	7390
	Height, mast extended 2)	h_4	4200	4500	4900	5200	5700	6200	6700	4000	—	4500	4900	5200	5500	—	5900	6200	6700	7200	7700
	Free lift, without load backrest	h_2	80	80	80	80	80	80	80	1470	—	1740	1990	2240	1470	—	1610	1740	1990	2240	2490
	Free lift, with load backrest	h_2	80	80	80	80	80	80	80	1160	—	1430	1680	1930	1160	—	1300	1430	1680	1930	2180

1) Without load backrest.
2) With load backrest; Height of standard load backrest is 1200 mm.

Pneumatic shaped cushion tyre			V							FV/FW					FSV/FSW						
8FBMT40	Tilt range, forward	deg	5	5	5	5	5	5	5	—	5	5	5	5	—	5	5	5	5	5	5
	Tilt range, backward	deg	10(6)	10(6)	10(6)	10(6)	6	6	6	—	10(6)	10(6)	10(6)	10(6)	—	6	6	6	6	6	6
	Load capacity at 500 mm LC	kg	4000	4000	4000	4000	4000	4000	3950	—	4000	4000	4000	4000	—	4000	4000	4000	3850	3710	3400
8FBMT45	Tilt range, forward	deg	5	5	5	5	5	5	5	—	5	5	5	5	—	5	5	5	5	5	5
	Tilt range, backward	deg	10(6)	10(6)	10(6)	10(6)	6	6	6	—	10(6)	10(6)	10(6)	10(6)	—	6	6	6	6	6	6
	Load capacity at 500 mm LC	kg	4500	4500	4500	4500	4500	4500	4450	—	4500	4500	4500	4500	—	4500	4500	4470	4340	4210	3650
8FBMT50	Tilt range, forward	deg	5	5	5	5	5	5	5	5	—	5	5	5	5	—	5	5	5	5	5
	Tilt range, backward	deg	10(6)	10(6)	10(6)	10(6)	6	6	6	10(6)	—	10(6)	10(6)	10(6)	6	—	6	6	6	6	6
	Load capacity at 600 mm LC	Kg	4990	4990	4990	4990	4990	4990	4950	4990	—	4990	4990	4990	4990	—	4970	4890	4750	4610	3850

Data in ( ) are for when ”Cabin Series” or front windshield is selected.

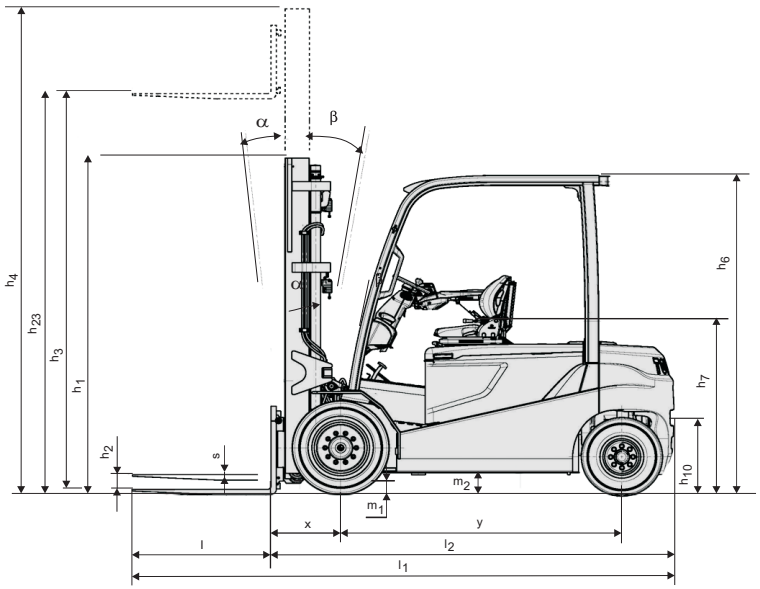

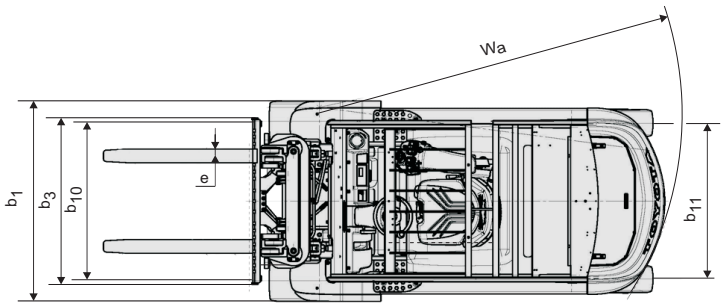

Standard equipments:

- Toyota SAS (System of Active Stability)
- Toyota AC power system
- Toyota ORS seat (Operator Restraint System)
- Seat mounted hydraulic minilevers
- Wide visible mast (MFH:3300)
- Long forks [length: 1000 mm (8FBM(K)T20-45), 1200 mm (8FBMT50)]
- Long forkbar [length: 1070 mm(8FBM(K)T20-35), 1170 mm (8FBMT40-50)]
- Load backrest (height: 1200 mm)
- 3 way valves
- Wet disc brakes
- Wide brake pedal
- Pneumatic shaped cushion tyres
- Full hydraulic power steering
- Digital Multifunction Display with wheel indicator
- Memory tilt steering column
- Emergency stop button in armrest

TP-Technical Publications, Sweden — 745558-040, 1406

TOYOTA INDUSTRIAL EQUIPMENT

TOYOTA MATERIAL HANDLING IN EUROPE, MANAGING THE TOYOTA AND BT MATERIALS HANDLING BRANDS IN EUROPE.

TOYOTA

MATERIAL HANDLING