CONSTRUCTION

50Hz

Rev. O

SECTIONAL VIEW

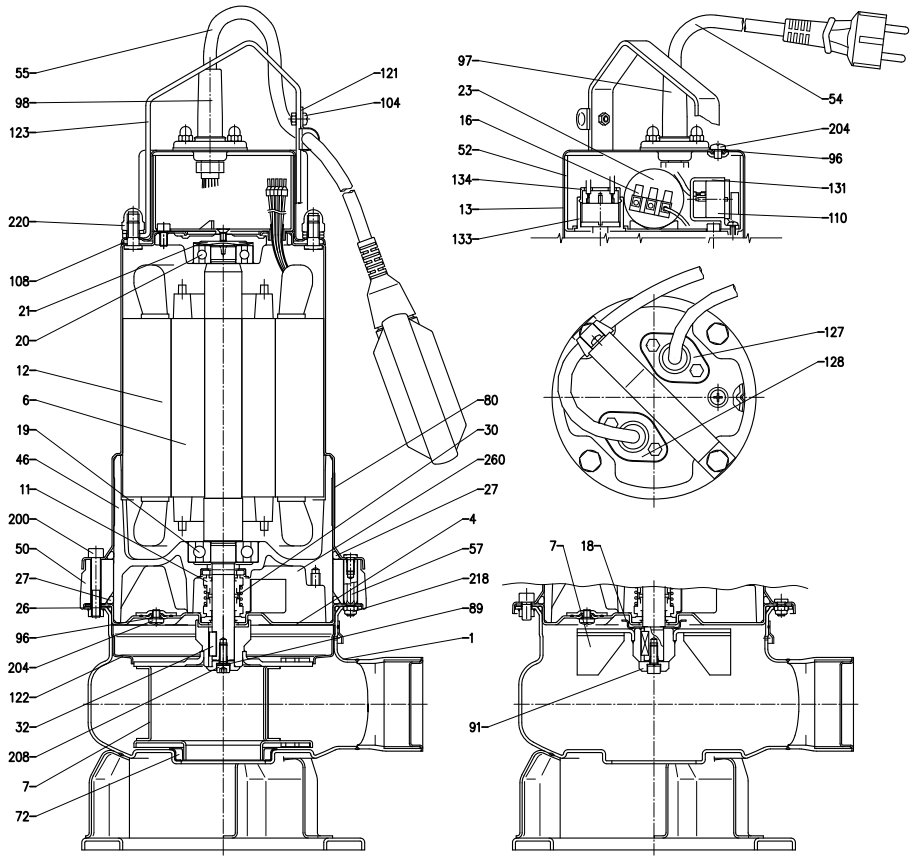

N°	PART NAME	MATERIAL	Q.TY	N°	PART NAME	MATERIAL	Q.TY
1	Casing	AISI 304	1	57	Spacer [3]	AISI 304	4
4	Casing cover	AISI 304	1	72	Casing ring [5]	NBR	1
6	Shaft with rotor	AISI 304	1	89	Washer	AISI 304	1
7	Impeller	AISI 304	1	91	Washer [1]	AISI 304	1
11	Mechanical seal	SiC/SiC/NBR	1	96	O ring	NBR	3
11	Mechanical seal	Carbon/Ceramic/NBR	1	97	Power cable entry	NBR	1
12	Motor frame with stator	-	1	98	Floating sw cable entry [4]	NBR	1
13	Motor cover	AISI 304	1	104	Cable guard [4]	NBR	1
16	Terminal	-	1	108	Cover gasket	NBR	1
18	Mechanical seal protection [1]	AISI 304	1	110	Protector [2]	-	2
19	Lower side ball bearing	-	1	121	Support for float switch [4]	AISI 304	1
20	Upper side ball bearing	-	1	122	Impeller protection ring [6]	AISI 304	1
21	Adjiusting ring	Steel C70	1	123	Handle	AISI 304	1
23	Capacitor [2]	-	1	127	Power cable connector	AISI 304	1
26	O ring	NBR	1	128	Floating sw . cable connector [4]	AISI 304	1
27	O ring	NBR	1	131	Support for protector [7]	PA66 glass fibre reinforced	1
27	O ring [3]	NBR	1	133	Support for probe [7]	Aluminium	1
30	Mechanical seal spacer	Brass	1	134	Cover for support probe [7]	PA6	1
32	Key	AISI 304	1	200	Screw	Stainless steel A2 UNI 7323	6
46	Bearing housing	G20	1	204	Screw	Stainless steel A2 UNI 7323	3
50	Spacer [3]	G20	1	208	Screw	Stainless steel A2 UNI 7323	1
52	Terminal insulating box	PA66 glass fibre reinforced class V-0	1	218	Nut	Stainless steel A2 UNI 7323	4
54	Power cable	-	1	220	Nut	Stainless steel A2 UNI 7323	4
55	Float switch [4]	-	1	260	Lubricating liquid	White mineral oil	385 cc

[1] Except for DW-DW VOX 300
[2] Only for single phase
[3] Only for DW-DW VOX 300
[4] Only for single phase with float switch
[5] Only for DW
[6] Except for DW VOX 150, 200 and 300
[7] Only for single phase DW 150