Side channel pumps

SK and ASK series
with mechanical seal or magnetic coupling
PN 40

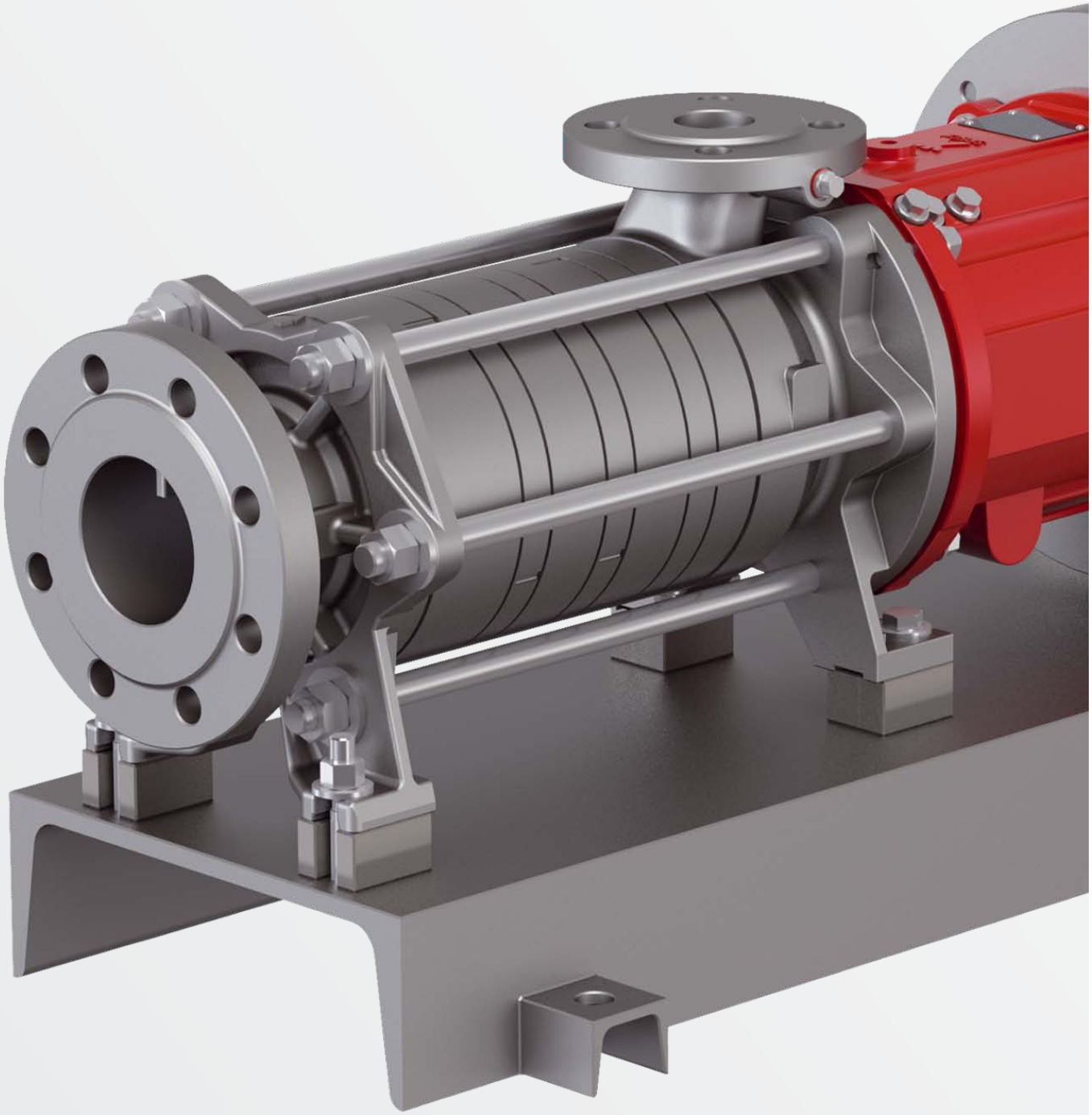

speck

Applications

Heating & Cooling technology

» Delivering cooling brine
» Filling and emptying thermal oil systems

Energy technology

» Delivery and circulation in closed circuits
» Feeding boilers in boiler systems and steam generators
» Tank systems, including delivering liquid gas
» Delivery of diesel in backup generators in power stations

Chemical & Pharmaceutical industry

» Delivering aggressive, highly flammable and toxic media
» Recovery of condensates, e.g. solvents

Further applications

» Delivery of salt water and fresh water in ships

Contact an representations

Speck Pumpen Walter Speck GmbH & Co. KG
Speck Pumpen Systemtechnik GmbH
Regensburger Ring 6 – 8
91154 Roth / Germany
T: +49 9171 809 0
F: +49 9171 809 10
info@speck.de
www.speck.de

International representations
See page 28

Side channel pumps made by Speck

High operational safety, optimal design and service-friendly

Fields of application

» Designed for feeding, filling and emptying operations under difficult physical conditions
» Suitable for the delivery of gas / self-priming
» Suitable for liquids without abrasive contaminants and without solid particles
» Wide temperature range from - 100 °C up to + 350 °C

Modular system

» Horizontal multistage modular pumps
» Available in a wide range of materials with components from stainless steel, bronze and spheroidal graphite cast iron
» Minimum stock of spare parts required
» Designs with mechanical seal, packing gland and magnetic coupling
» Medium-specific designs
» ATEX certified (II 2G)

Operating limits

With mechanical seal	from	0 bis + 140 °C uncooled 0 bis + 180 °C cooled
With magnetic coupling	from	- 100 bis + 350 °C
Nominal pressure	PN 40	
H_{max}	400 m	
Q_{max}	35 m³/h (50 Hz) 42 m³/h (60 Hz)	

Temperature ranges depend on materials, seals and pumped media

SK series

Side channel pumps in acc. with EN 734

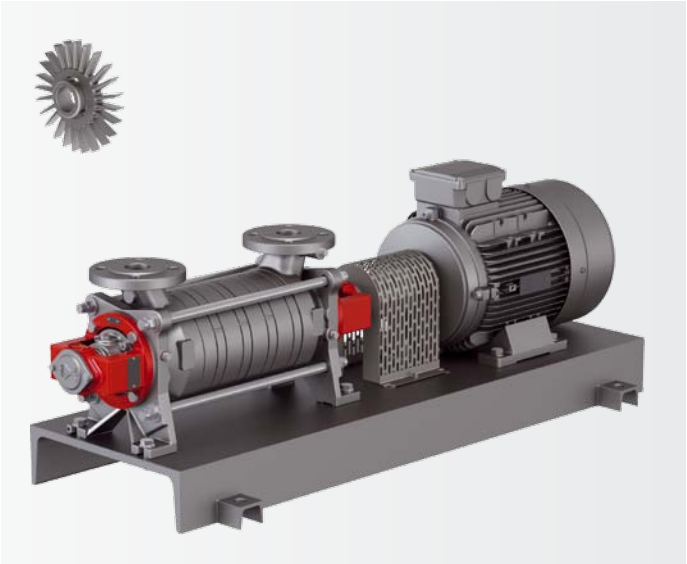

Proven side channel pumps for universal applications

ASK series

Side channel pumps with NPSH stage

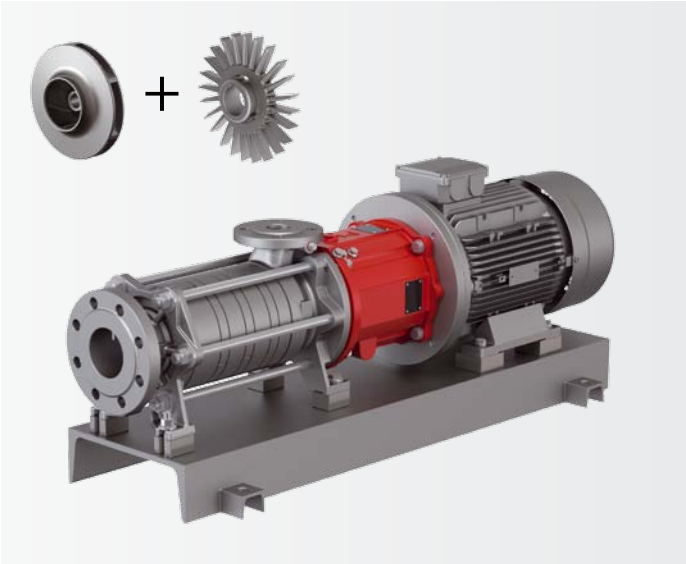

Combi-pumps for delivering liquids in physically difficult conditions on the suction side

Their very good NPSH values make them particularly suitable for pumped media near the boiling-point

The right pump for your system

Choose from eight series

Each system is unique in its own way - on some, the sealing principle is key, on others the installation frame or perhaps the special properties of the medium. You can choose from eight series and find the best solution for your system.

▼ Sealing

Version with mechanical sealing (G) ▶

» Packing gland on request
» Media form 0 up to + 180 °C
» Wide range of seals
» ATEX II 2G

Version with magnetic coupling (M) ▶

» Media from - 100 up to + 350 °C
depending on the materials used
(→Type code page 8)
» Wide range of magnetic coupling sizes
» Hastelloy® or ceramic separating cans, PN 40
» ATEX II 2G

▼ Design

Version with 2 rolling bearings ▶

» 2 external lifetime lubricated rolling bearings
» 2 mechanical sealings or respectively packing glands
» Motor coupled
» Base plate
» 1 – 8 stages

Version with 1 sleeve bearing und 1 rolling bearing ▶

» 1 media-lubricated sleeve bearing (carbon or SiC)
» 1 external lifetime lubricated rolling bearing
» 1 mechanical sealing or respectively packing gland
» Motor coupled
» Base plate
» 1 – 8 stages

Version with1 sleeve bearing, 1 rolling bearing, bracket ▶

» 1 media-lubricated sleeve bearing (carbon or SiC)
» 1 external lifetime lubricated rolling bearing
» 1 mechanical seal or respectively packing gland
» Motor close-coupled with bracket
» Bracket with feet
» 1 – 3 stages

Version with bracket ▶

» 2 media-lubricated sleeve bearings (carbon or SiC)
» Bracket for magnetic coupling
» Motor close-coupled with bracket
» Base plate
» 1 – 8 stages

Version with bracket und bearing bracket ▶

» 2 media-lubricated sleeve bearings (carbon or SiC)
» Bracket for magnetic coupling
» Bearing bracket with optional secondary seal
» Motor coupled
» Base plate
» 1 – 8 stages

▼ SK series

▼ Main dimensions in acc. with EN 734

» Proven side channel pumps for universal applications

▼ ASK series

▼ Combi-pumps with NPSH suction stage

» Combi-pumps for delivering liquids in physically difficult conditions on the suction side
» Their very good NPSH values make them particularly suitable for pumped media near the boiling-point

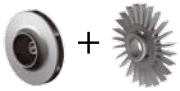

SKG-LL

SKG-LO

ASKG

SKG-LA

SKM

ASKM

SKM-LT

ASKM-LT

Modular system

With Speck you get a modular system with many identical parts.

SK series

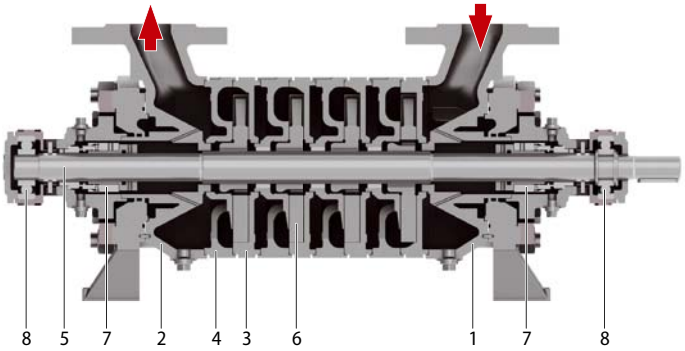

SKG-LL

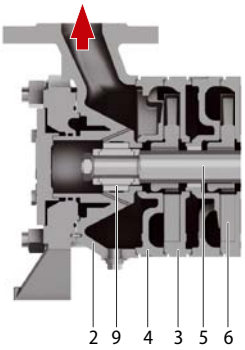

SKG-LO

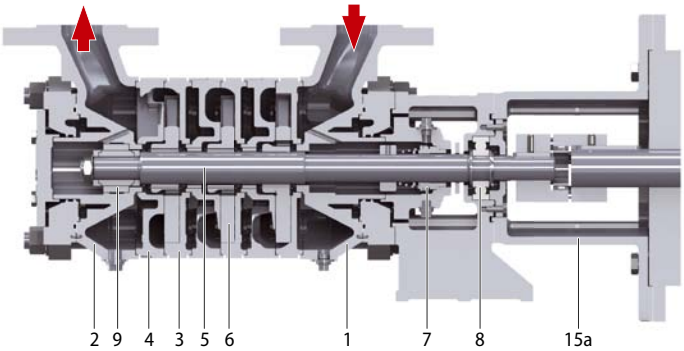

SKG-LA

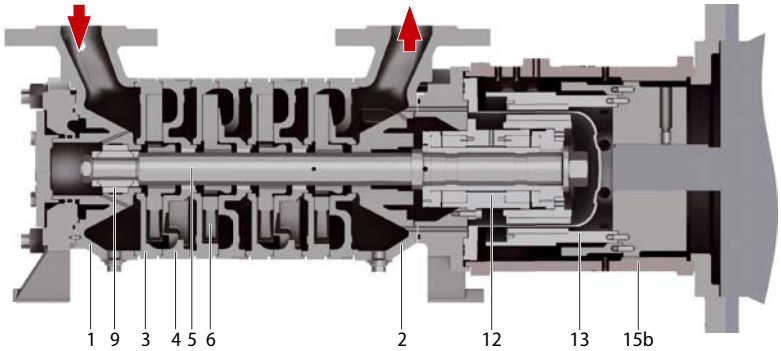

SKM

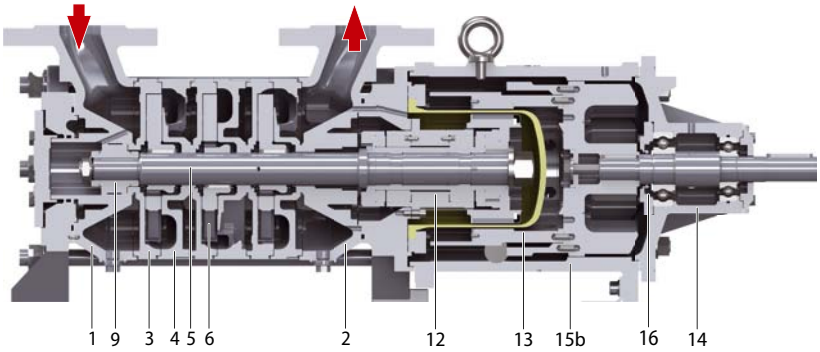

SKM-LT

Version with ceramic can and secondary seal (16)

SKG-LL	SKG-LO	SKG-LA	SKM	SKM-LT	ASKG	ASKM	ASKM-LT	No.	Designation / notes
x	x	x	x	x	x	x	x	1	Suction casing
x	x	x	x	x	x	x	x	2	Discharge casing
x	x	x	x	x	x	x	x	3	Suction stage
x	x	x	x	x	x	x	x	4	Discharge stage
x	x	x	x	x	x	x	x	5	Shaft
x	x	x	x	x	x	x	x	6	Star impeller
x	x	x			x			7	Mechanical seal (or stuffing box packing, not illustrated)
x	x	x			x			8	Rolling bearing
	x	x	x	x	x	x	x	9	Sleeve bearing made of SiC (or carbon bearing, not illustrated)
					x	x	x	10	Stage N
					x	x	x	11	Radial impeller
			x	x		x	x	12	Bearing cartridge made of SiC
			x	x		x	x	13	Magnetic coupling, can made of Hastelloy® or ceramics
				x			x	14	Bearing bracket
		x	x	x		x	x	15a / 15b	Bracket
				x			x	16	Secondary seal (radial shaft sealing) for magnetic couplings with ceramic can

ASK series

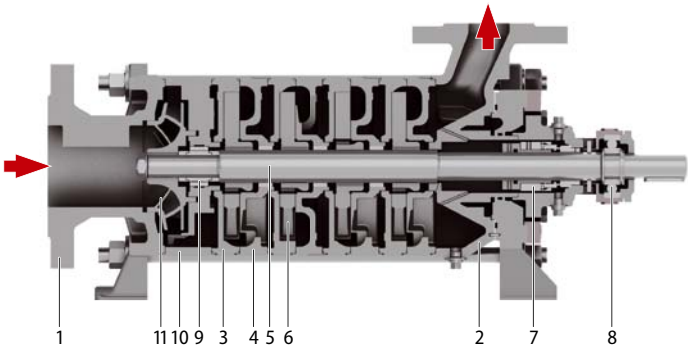

ASKG

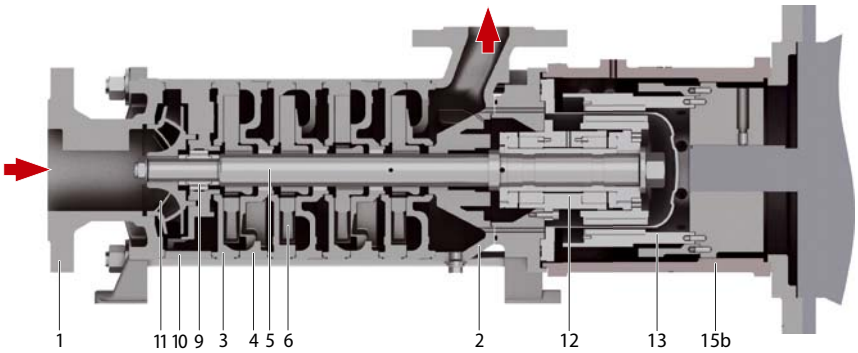

ASKM

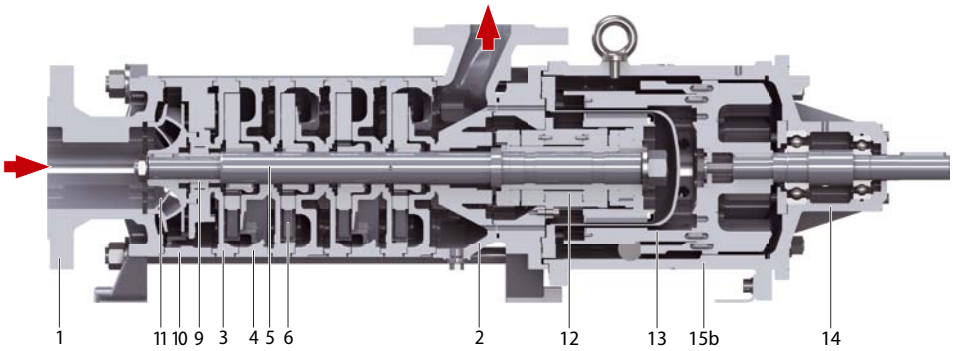

ASKM-LT

Also for critical media and applications

» Medium-specific designs suitable for the delivery of acids, lyes, fuel, glycol, glycerine, hot water, oil, etc.
» Casing seals with O-rings, graphite, FKM, FFKM or EPDM
» Stage sealings made of graphite, Teflon® or various liquid seals by Epple® .
» ATEX certified (II 2G)

Robust and durable

» Robust lifetime lubricated rolling bearings
» Solid, hydrodynamically lubricated sleeve bearings made from carbon, a proven slide material – extremely hard wearing and highly resistant to corrosive media.
» SiC sleeve bearings alternatively

Versions

Type code with versions and material designs

ASK	G	32	04		-012			-11	000
SK	G	32	04	LL	-113			-40	000
SK	G	32	04	L0	-013			-30	000
ASK	S	32	04		-000			-11	000
SK	S	32	04	LA	-000			-11	000
ASK	M	32	04		-	62	4	-60	000
SK	M	32	04		-	75	2	-20	000
ASK	M	32	04	LT	-	62	4	-60	000
SK	M	32	04	LT	-	75	6	-20	000

Series
Sealing (table 1)
Size
Number of stages
Shaft bearing (Table 2)
Shaft sealing (Table 3)
Magnetic coupling – Size (Table 4)
Magnetic coupling – PN (Table 5)
Material designs and temperature range (table 6)
Counting number

Table 1: Sealing

Code	M	G	S
	Magnetic coupling	Mechanical seal	Stuffing box packing (on request)

Table 2: Versions

	ASKG / ASKS	SKG /SKS			ASKM / SKM	
Code	**-**	**LL**	**L0**	**LA**	**-**	**LT**
Stage number	1 - 8	1 - 8	1 - 8	1 - 3	1 - 8	1 - 8
Bearing suction-side	Sleeve bearing	Rolling bearing	Rolling bearing	Rolling bearing	Sleeve bearing	Sleeve bearing
Bearing pressure-side	Rolling bearing	Rolling bearing	Sleeve bearing	Sleeve bearing	Sleeve bearing	Sleeve bearing
Mech. seal / Stuffing box p. suction-side	–	x / x	x / x	x / x	–	–
Mech. seal / Stuffing box p. pressure-side	x / x	x / x	–	–	–	–
Design	Base plate version	Base plate version	Base plate version	Bracket version	Base plate version	Bearing bracket, base plate

Table 3: Shaft sealing

SKG-LL
2 mechanical seals and 2 external rolling bearings

	O-ring	Single-acting mechanical seal		
Properties	Elasto-mer	SiC / A carbon	SiC / B carbon	SiC / SiC
Suction-side: unbalanced Pressure-side: unbalanced uncooled, up to 140 °C	FFKM	**110**	**220**	**330**
	EPDM	**112**	**222**	**332**
	FKM	**113**	**223**	**333**
Suction-side: unbalanced Pressure-side: balanced uncooled, up to 140 °C	FFKM	**140**	**250**	**360**
	EPDM	**142**	**252**	**362**
	FKM	**143**	**253**	**363**
Suction-side: balanced Pressure-side: balanced uncooled, up to 140 °C	FFKM	**440**	**550**	**660**
	EPDM	**442**	**552**	**662**
	FKM	**443**	**553**	**663**
Suction-side: balanced Pressure-side: balanced cooled, up to 180 °C	FFKM	**770**	**880**	**990**
	EPDM	**772**	**882**	**992**
	FKM	**773**	**883**	**993**

ASKG, SKG-L0, SKG-LA
1 mechanical seal, 1 sleeve bearing and 1 external rolling bearing

	O-ring	Singe-acting mechanical seal			Double-acting mechanical seal		
Properties	Elasto-mer	SiC / A carbon	SiC / B carbon	SiC / SiC	SiC / A carbon	SiC / B carbon	SiC / SiC
Unbalanced uncooled, up to 140 °C	FFKM	**010**	**020**	**030**	**110**	**220**	**330**
	EPDM	**012**	**022**	**032**	**112**	**222**	**332**
	FKM	**013**	**023**	**033**	**113**	**233**	**333**
Balanced uncooled, up to 140 °C	FFKM	**040**	**050**	**060**	**440**	**550**	**660**
	EPDM	**042**	**052**	**062**	**442**	**552**	**662**
	FKM	**043**	**053**	**063**	**443**	**553**	**663**
Balanced cooled, up to 180 °C	FFKM	**070**	**080**	**090**	**770**	**880**	**990**
	EPDM	**072**	**082**	**092**	**772**	**882**	**992**
	FKM	**073**	**083**	**093**	**773**	**883**	**993**

000: Stuffing box packing (**SKS / ASKS**)
XXX: Special version, details in order-related documents

Table 4: Size of magnetic coupling

Code no.	51	52	61	62	63	71	72	73	74	75
Size	60-40	60-60	75-40	75-50	75-60	110-40	110-50	110-60	110-70	110-80
$p_{max.}$ bar	40	40	40	40	40	25/40	25/40	25/40	25/40	25/40

Code no.	81	82	83	84	85	91	92	93	94	95
Size	135-50	135-60	135-70	135-80	135-90	165-80	165-90	165-100	165-110	165-120
$p_{max.}$ bar	40	40	40	40	40	25/40	25/40	25/40	25/40	25/40

Table 5: Magnetic coupling – Material design of separating can

Code no.	2	4	6
Max. admissible pressure Material design of separating can	PN 25, max. 25 bar, Hastelloy®	PN 40, max. 40 bar, Hastelloy®	PN 40, max. 40 bar, Ceramics

Table 6: Material designs and temperature ranges

Special materials on request

SK

Sealing			Code no.	11	20	30	31	40	60	61
G	S	M	Parts							
x	x	x	Suction casing	EN-GJS-400-15	EN-GJS-400-15	EN-GJS-400-15	–	GBz	1.4581	1.4531
x	x	x	Discharge casing	EN-GJS-400-15	EN-GJS-400-15	EN-GJS-400-15	–	GBz	1.4581	1.4581
x	x	x	Stage	EN-GJS-400-15	EN-GJS-400-15	EN-GJS-400-15	–	GBz	1.4581	1.4581
x	x		Shaft seal casing	EN-GJS-400-15	EN-GJS-400-15	EN-GJS-400-15	–	GBz	1.4581	1.4581
x	x	x	Star impeller	GBz	1.4408	1.4408	–	GBz	1.4408, hardened	1.4408, hardened
x	x	x	Shaft	1.4122	1.4122	1.4122	–	1.4571	1.4571	1.4571
x	x	x	Pump frame[1]	EN-GJS-400-15	EN-GJS-400-15	EN-GJS-400-15	–	EN-GJS-400-15	EN-GJS-400-15	EN-GJS-400-15
		x	Pump frame[2]	EN-GJS-400-15	EN-GJS-400-15	EN-GJS-400-15	–	1.4581	1.4581	1.4581
x	x		Temperature limits	0 up to + 180 °C	0 up to + 180 °C	0 up to + 180 °C	–	0 up to + 180 °C	0 up to + 180 °C	0 up to + 180 °C
		x	Temperature limits	- 20 up to + 200 °C	- 40 up to + 350 °C	- 40 up to + 200 °C	–	0 up to + 180 °C	- 100 up to +250 °C	- 40 up to +350 °C

[1] no contact with the medium
[2] in contact with the medium

ASK

Sealing			Code no.	11	20	30	31	40	60	61
G	S	M	Parts							
x	x	x	Suction casing	EN-GJS-400-15	EN-GJS-400-15	EN-GJS-400-15	EN-GJS-400-15	1.4581	1.4581	1.4581
x	x	x	Discharge casing	EN-GJS-400-15	EN-GJS-400-15	EN-GJS-400-15	EN-GJS-400-15	GBz	1.4581	1.4581
x	x	x	Stage	EN-GJS-400-15	EN-GJS-400-15	EN-GJS-400-15	EN-GJS-400-15	GBz	1.4581	1.4581
x	x	x	Stage / NPSH	EN-GJS-400-15	EN-GJS-400-15	EN-GJS-400-15	EN-GJS-400-15	1.4581	1.4581	1.4581
x	x		Shaft seal casing	EN-GJS-400-15	EN-GJS-400-15	EN-GJS-400-15	EN-GJS-400-15	GBz	1.4581	1.4581
x	x	x	Star impeller	GBz	1.4408	1.4408	1.4408	GBz	1.4408, hardened	1.4408, hardened
x	x		Impeller / NPSH	EN-GJL-250	EN-GJL-250	EN-GJL-250	1.4408	1.4408	1.4408	1.4408
x	x	x	Shaft	1.4122	1.4122	1.4122	1.4122	1.4571	1.4571	1.4571
x	x		Pump frame[1]	EN-GJS-400-15	EN-GJS-400-15	EN-GJS-400-15	EN-GJS-400-15	EN-GJS-400-15	EN-GJS-400-15	EN-GJS-400-15
		x	Pump frame[2]	EN-GJS-400-15	EN-GJS-400-15	EN-GJS-400-15	EN-GJS-400-15	1.4581	1.4581	1.4581
x	x		Temperature limits	0 up to +180 °C	0 up to +1 80 °C	0 up to + 180 °C	0 up to + 180 °C	0 up to + 180 °C	0 up to +180 °C	0 up to + 180 °C
		x	Temperature limits	-20 up to +200 °C	- 40 up to + 350 °C	- 40 up to + 200 °C	- 40 up to + 200 °C	0 up to + 180 °C	- 100 up to + 250 °C	- 40 up to + 350 °C

[1] no contact with the medium
[2] in contact with the medium

The operating limit values result from the max. permissible pressure and the max. permissible temperature as well as the pumped medium with its specific vapour pressure. See "Dimensioning" Page 11.

Quality assurance and tests

Modern, computer-controlled and fully automated test stands on the premises of Speck

Test stand for liquid pumps on the premises of Speck in Roth
Measuring of hydraulics, power requirements, axial thrust, vibrations and NPSH values. Heads of up to 400 m and flow rates of up to 750 m³/h.

Thermal oil test stand with pump surveillance system on the premises of Speck in Roth.
Research of impacts of high temperatures up to 350 °C on the lifetime of the pumps.

Order-related tests and dimensioning

Pressure tests

Speck carries out the tests below as standard:

Gas pressure test
The gas pressure test is used to prove that the components are leak-proof. All components that bear pressure are tested, such as the discharge casing and the suction casing, stages and mechanical seal casing. The test is carried out with forming gas at 2 bar. The holding time is 15 minutes.

Hydrostatic pressure test
The hydrostatic pressure test is used to prove strength of the components and that the pump is leak-proof. The fully assembled pump is tested. The test is carried out with a hydrostatic test pressure based on prEN 12162.

If you want to use pressure tests according to different criteria, please enter them in the request.

Testing the performance

At the customer's request, Speck offers the following tests:

Hydraulic tests
The measurement of the characteroistic curves apply to the delivery of water with a temperature of 20 °C at nominal speed Tolerances: flow rate ± 10 %, total head ± 10 % power requirement + 10 %.
Deviating properties of the media to be pumped affect the characteristic curves.

NPSH test
In this test, the suction-side pressure is gradually reduced until the decrease in the delivered head reaches 3 % at a constant flow rate. At least four flows are evaluated that are spread appropriately over the admissible operating range. The NPSH value is not a guarantee point.

Vibration test
Vibration test according to EN ISO 5199, Edition 2002
The vibration values are measured radially and vertically at every operating point on the bearing casing at the nominal speed and with the corresponding flow rate.

Temperature measurement
The measurement is taken on the motor-side bearing at operating temperature. The operating temperature and the ambient temperature at every operating point measured are documented.

Standard conditions at site

» Ambient temperature from - 20 °C to + 40 °C
» Permissible altitude up to 1000 m above sea level

Deviations from the site conditions specified herein must already be disclosed in the inquiry.

Dimensioning

Assessment of the maximum pump outlet pressure
The pump outlet pressure at the pump nozzle depends on
» the pump inlet pressure
» the density of the medium to be pumped

The maximum pump outlet pressure $p_{2max\ op}$ is calculated using the formula:

$$p_{2max\ op} = p_{1max\ op} + \rho \cdot g \cdot H \cdot 10^{-5}$$

With:

$p_{2max\ op}$	=	maximum pump outlet pressure [bar]
$p_{1max\ op}$	=	maximum pump inlet pressure [bar]
ρ	=	density of the medium to be pumped[kg/m³]
g	=	gravitation constant [m/s²]
H	=	maximum total head at zero flow or at the peak of the pump's characteristic curve [m]

Pumps must be selected and operated in a way which ensures that the maximum pump outlet pressure does by no means exceed the maximum permissible operating pressure of the casing $p_{all\ w\ c}$ at operating pressure.
This also applies to commissioning while the discharge valve is closed (refer to diagram).

Pressure and temperature limitations
The maximum casing operating pressure $p_{all\ w\ c}$ of the pressure retaining parts depends on the operating temperature:

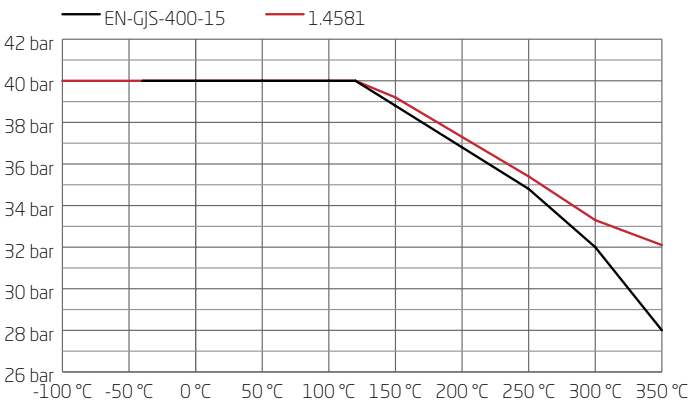

Maximum permissible casing operating pressure $p_{all\ w\ c}$
EN-GJS-400-15: spheroidal graphite cast iron
1.4581: stainless steel

Magnetic couplings

Optimal design

The wide range of magnetic couplings offers an optimum configuration for your operating conditions and cuts energy consumption.

Wide range
Magnetic couplings consist of an inner rotor, a separating can and an outer rotor. The separating can seals the pumped media from the atmosphere.
A great variety of sizes and configuration using the latest software guarantee the best design for your operating point.
The transmissible torques of the magnetic couplings range between 10 and 500 Nm.

Type code for magnetic couplings

Type code (example)	135-	70
Nominal diameter DN		
Magnet length [mm]		

Magnetic coupling sizes and versions

		Magnet diameter				
		DN 60	DN 75	DN 110	DN 135	DN 165
Magnet length in mm	40	x	x	x		
	50		x	x	x	
	60	x	x	x	x	
	70			x	x	
	80			x	x	x
	90				x	x
	100					x
	110					x
	120					x
Separating can made of Hastelloy®		PN 40	PN 40	PN 40	PN 40	PN 40
Separating can made of ceramic ZrO_2MgO		not available		PN 40 on request		

Cooling through flushing bores
Eddy current, viscosity and bearing friction losses generate heat inside the pump, adding to the temperature of the medium. Flushing bores in the inner rotor and the casing ensure that critical points are cooled with the medium. At the same time, gases or air are conducted out of the inner rotor.

Robust Hastelloy® separating cans

Proven and with low eddy current losses
High-grade Hastelloy® separating cans come as standard with Speck. This robust material has proven its properties in daily use in many industries.
The finely graduated coupling and separating can diameters allow optimum design with minimum eddy current losses.

Safety with temperature monitoring
If required (e. g. in areas with potentially explosive atmospheres), with Hastelloy® separating cans, temperature sensors can be mounted into the bracket to monitor the surface temperature of the separating can.

PT-100 temperature sensor (standard design)

The universal linear PT-100 temperature sensor with a detection range from -100 to + 400 °C is available in three versions.

» Standard design
» ATEX design without SIL/IPL2
» ATEX design with SIL/IPL2

All three versions can be optimally adjusted for length using a compression fitting. In addition, the sensor tip is held against the separating can using a spring to guarantee secure contact.

Ceramic ZrO_2MgO separating cans

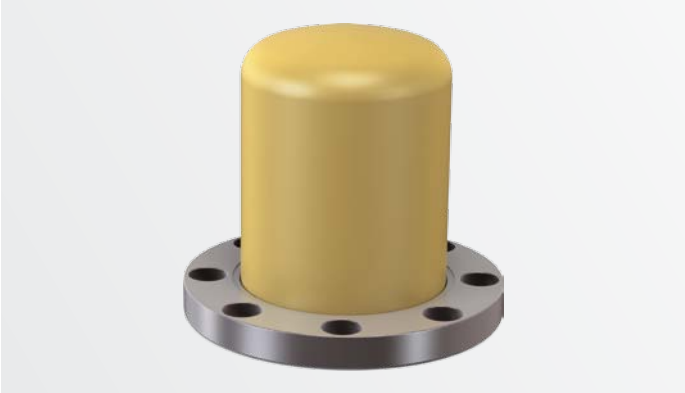

Ceramic separating cans have two advantages:

Energy savings

Magnetic fields cause eddy currents within metal separating cans, increasing the overall energy consumption of the pumps. Ceramic separating cans mean there are no eddy currents, leading to significant energy savings.

The graph below shows the additional energy consumption of a metal separating can due to eddy currents. It shows the energy consumption in relation to the length of the magnet (in 10 mm increments) and to the diameters.
In the case of the largest separating can diameter, energy consumption rises to the power of three.

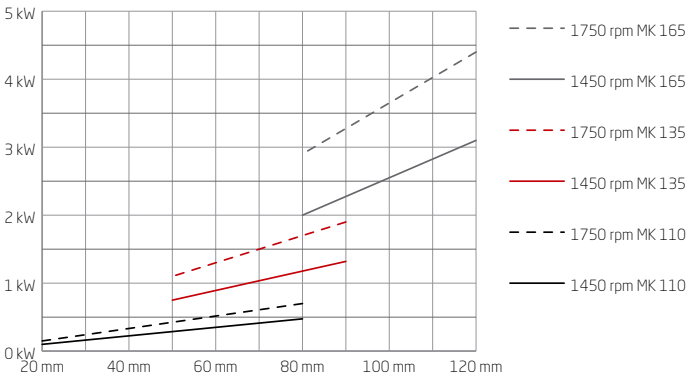

The additional energy consumption found in magnetic couplings with metal separating cans due to electrical eddy currents is completely eliminated by using ceramic separating cans.

No entry of heat into the medium

In metal separating cans, the electrical eddy currents described above are converted into thermal energy, thereby increasing the heat of the medium. With ATEX applications and media near vapour pressure, this can become a considerable problem. With ceramic separating cans the medium retains its temperature.

Safety through leak detection

Separating cans often break as a result of vibrations caused, for exam-ple, by damaged bearings after they have been running dry, or by vibrations in the system.
In the event of a rupture, there is a danger of the medium getting into the motor through the motor casing, which must be avoided when explosive substances are being pumped.

For your safety we can offer a leak monitoring sensor which detects any medium emerging after a rupture of the separating can and immediately switches off the pump or the system.
In addition, the sealed bracket temporarily prevent the medium from entering the environment.

On request, we can also fit a pipe to the bracket to safely remove the pumped medium. The connector for the pipe is directly opposite the sensor.

1 Leak sensor

Main dimensions

SK series

Connecting dimensions for SKG-LL, SKG-LO, SKG-LA and SKM

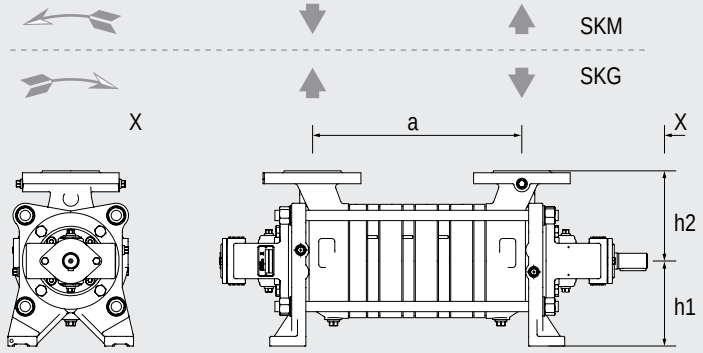

Position of inlet and outlet nozzle

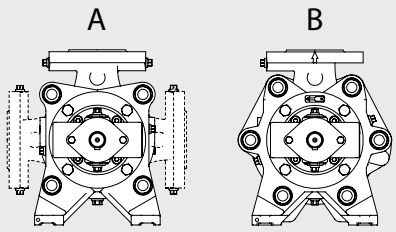

	Dimensions										Flanges	Position of inlet and outlet nozzle		
	a								h1	h2	Suction + Discharge	SKG		SKM
Stage no. →	**1**	**2**	**3**	**4**	**5**	**6**	**7**	**8**	**-**	**-**	**-**	**1, 2, 3, 4**	**5, 6, 7, 8**	**1 - 8**
SK...20	120	120	154	188	222	256	290	324	100	100	DN 20	A	A	A
SK...32 / 33	146	146	186	226	266	306	346	386	112	132	DN 32	A	B	B
SK...40	160	215	270	325	380	435	490	545	132	140	DN 40	A	B	B
SK...50	175	250	325	400	475	550	625	700	160	165	DN 50	A	B	B
SK...65	195	285	375	465	555	645	735	825	180	180	DN 65	A	B	B

SKG: Direction of rotation anticlockwise on request.

ASK series

Connecting dimensions for ASKG and ASKM

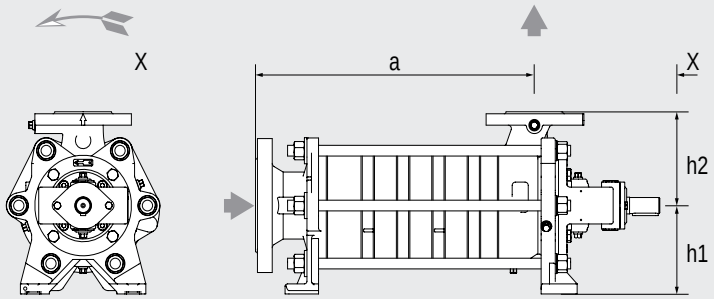

Position of outlet nozzle

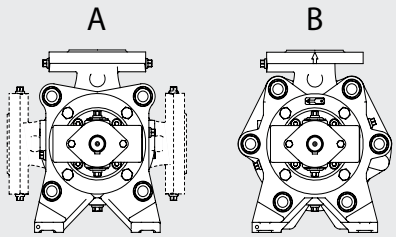

	Dimensions										Flanges		Position of outlet nozzle
	a								h1	h2	Suction	Discharge	ASKG and ASKM
Stage no. →	**1**	**2**	**3**	**4**	**5**	**6**	**7**	**8**	**-**	**-**	**-**	**-**	**1 - 8**
ASK...20	195	229	263	297	331	365	399	433	100	100	DN 40	DN 20	A
ASK...32 / 33	213	253	293	333	373	413	453	493	112	132	DN 65	DN 32	B
ASK...40	268	323	378	433	488	543	598	653	132	140	DN 80	DN 40	B
ASK...50	305	380	455	530	605	680	755	830	160	165	DN 100	DN 50	B
ASK...65	338	428	518	608	698	788	878	968	180	180	DN 100	DN 65	B

Flanges

Flanges in acc. with EN 1092 PN 40.
Flanges in acc. with DIN EN 1092-2, drilled in acc. with ANSI 150 lbs or 300 lbs on request.

Simple and optimal configuration software

Perfect for production engineers and plant planners – liquid pump configuration with SPAIX

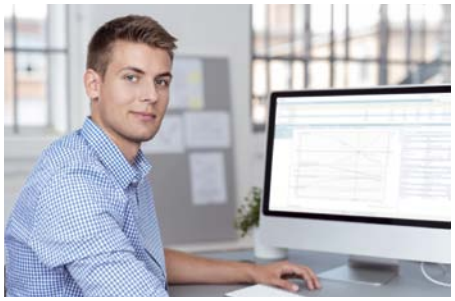

Configuration software by Speck - the perfect tool for planning new plants

We make SPAIX available to our authorised customers so they can configure and pre-select centrifugal and side channel pumps.

The web-based software accesses a continuously maintained database to offer a variety of selection parameters for design, sealing systems, hydraulic systems, operating conditions and media. Users can select either German or English as the language.

Production engineers and plant planners can use SPAIX to design new plants.

After consultation with Speck, users can also check currently installed pumps for which the plant parameters have changed: for example, after medium changeover or new operating conditions.

Executed configurations can be saved as a project and exported as a PDF with one click.

When the order is received, Speck also checks the customer's pre-selections to ensure that the project requirements have been satisfied.

Step 1
Selection of pump design or respectively application

For example
» Side channel pumps
» Heat transfer pumps
» High-pressure pumps
» Stainless steel pumps

Step 2
Selection of pump series

For example ASK / SK
» ASKM
» ASKG
» SKM
» SKG
  » SKG-LO
  » SKG-LA
  » SKG-LL

Step 3
Hydraulic selection and configuration of operating parameters

For example
» Operating point
» Operating conditions
» Medium
» Design features
» Seals

Step 4
Save and output the project as PDF

Topics
» Technical pump data sheet
» Characteristic curves with hydraulic performance, power consumption, efficiency and NPSH values
» Dimensional drawing of the pump with motor

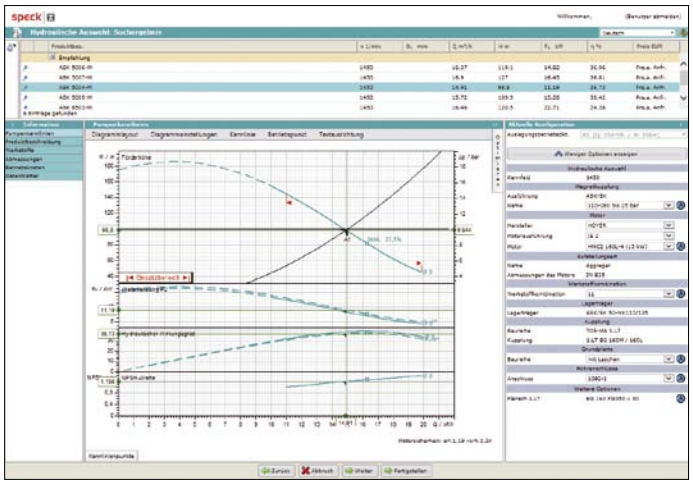

Screenshot - Hydraulic configuration with all necessary parameters

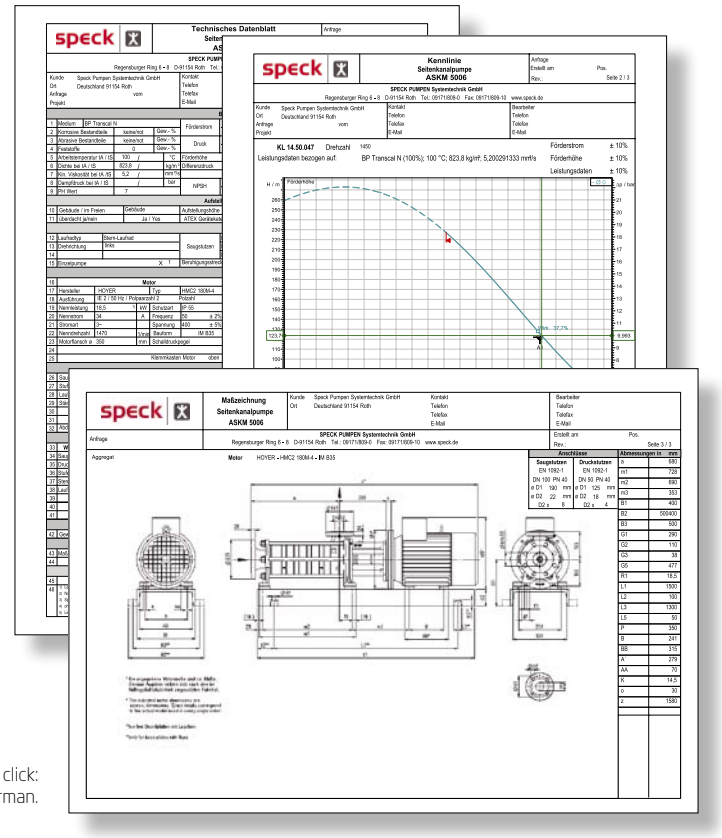

Easy documentation with one click:
Data sheet, characteristic curves and dimensional drawing as PDF in English or German.

Characteristic curves SK...20

50 Hz – 1450 min⁻¹

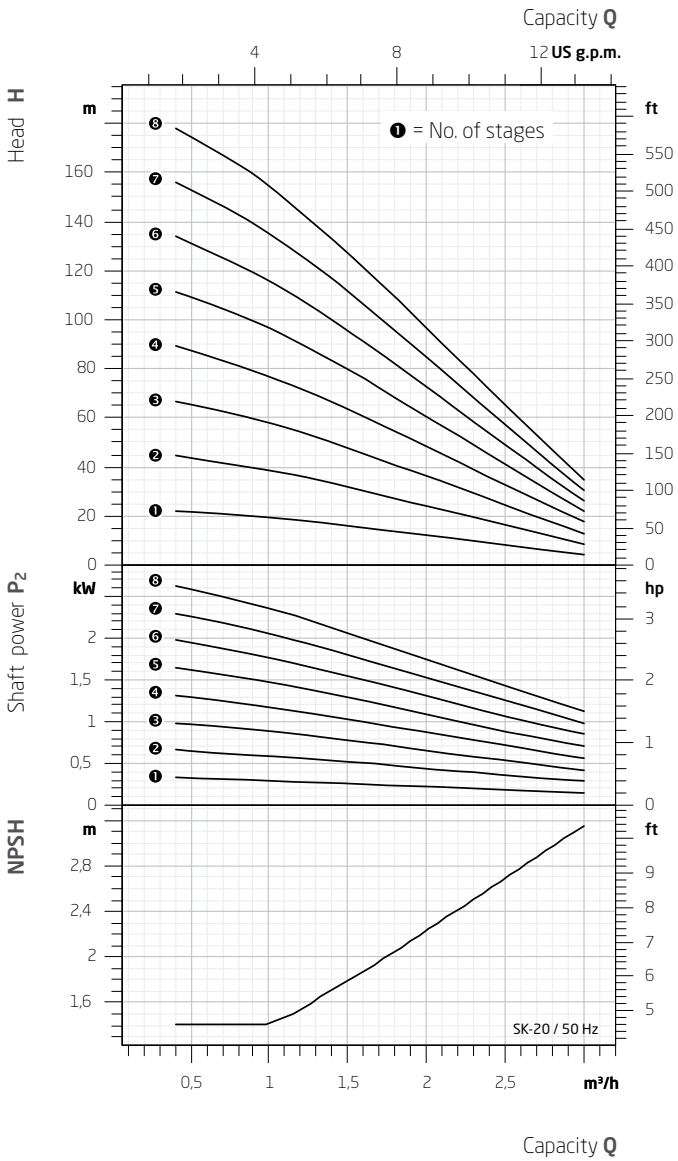

60 Hz – 1750 min⁻¹

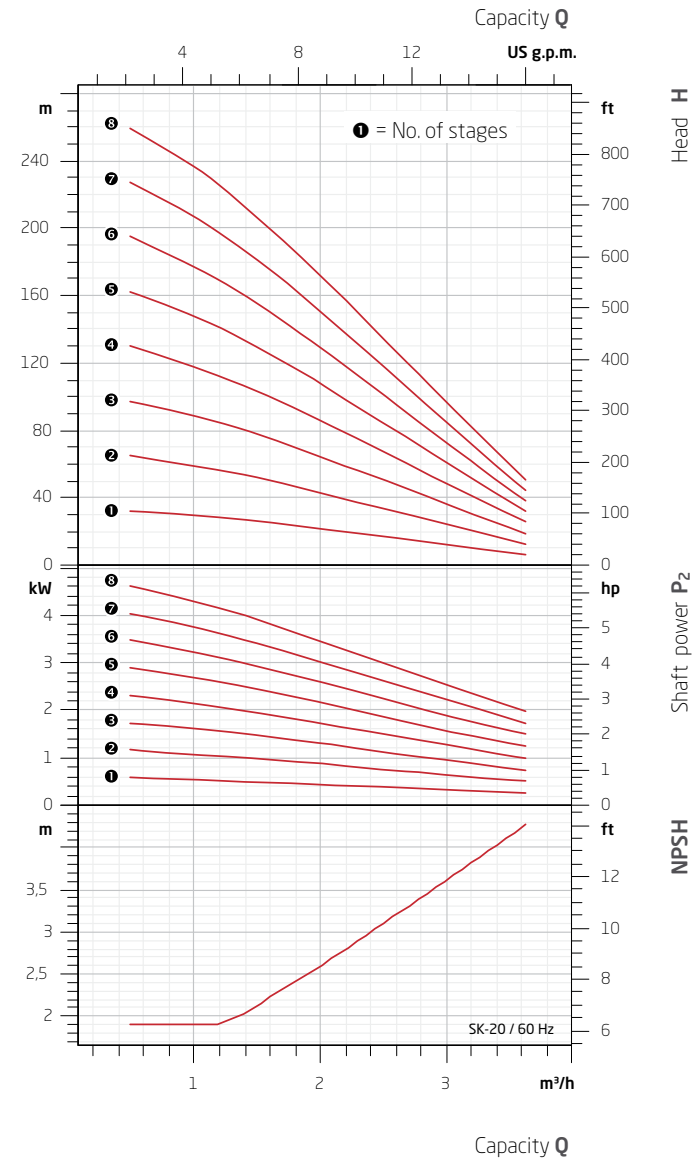

Binding characteristic curves only by SPAIX

These characteristic curves can be used to preselect a pump. They are deviating slightly depending on the material design. Only characteristic curves, which are specified with SPAIX configuration software can be referred to as binding.

Test conditions

The characteristic curves apply to the delivery of water with a temperature of 20 °C at nominal speed.

Tolerances

Flow rate ± 10 %, total head ± 10 %, power requirement + 10 %
Deviating properties of the media to be pumped affect the characteristic curves.

NPSH value

The NPSH value above shows the required NPSH value of the pump $NPSH_{required}$. This value has to exceed the NPSH value of the system $NPSH_{available}$ with a minimum surcharge of 0.5 m to exclude cavitation damages.
$NPSH_{available} \geq NPSH_{required} + 0.5$ m

Characteristic curves SK...32

50 Hz – 1450 min^{-1}

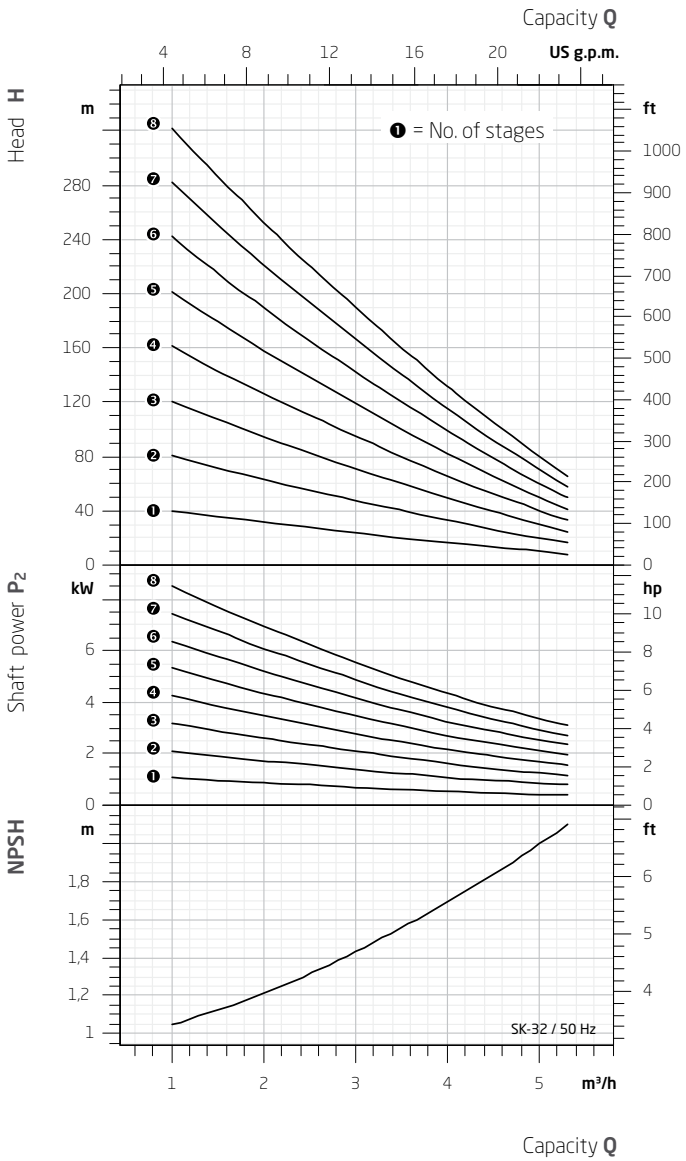

60 Hz – 1750 min^{-1}

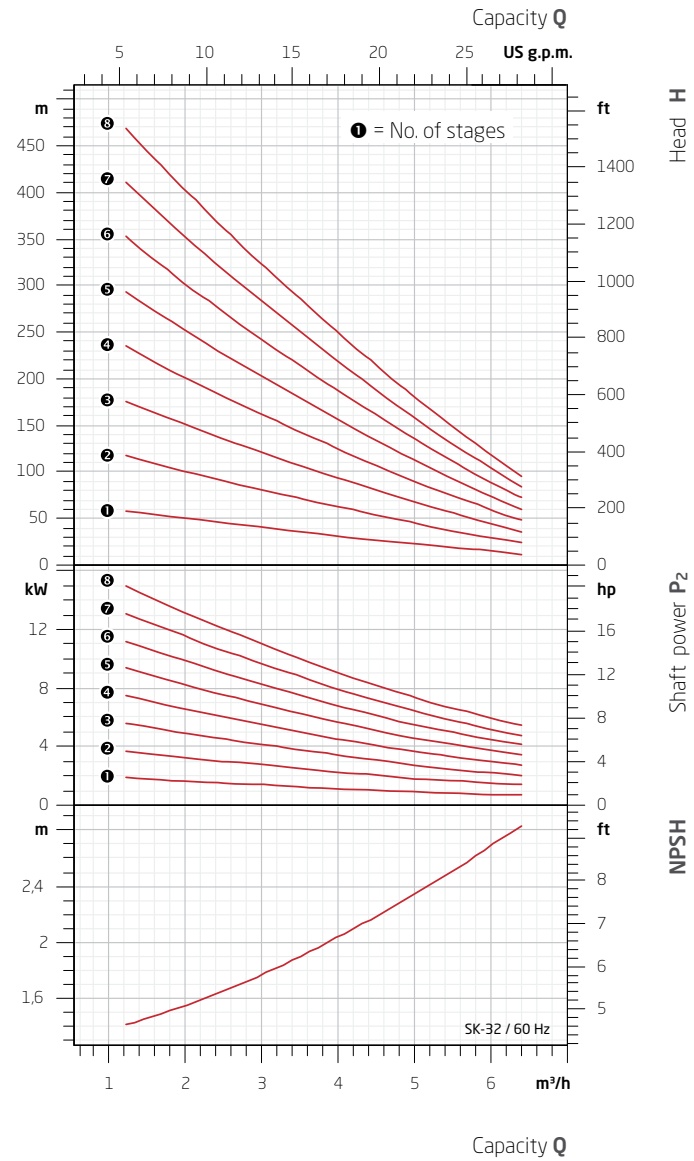

Binding characteristic curves only by SPAIX
These characteristic curves can be used to preselect a pump. They are deviating slightly depending on the material design. Only characteristic curves, which are specified with SPAIX configuration software can be referred to as binding.

Test conditions
The characteristic curves apply to the delivery of water with a temperature of 20 °C at nominal speed.

Tolerances
Flow rate ± 10 %, total head ± 10 %, power requirement + 10 %
Deviating properties of the media to be pumped affect the characteristic curves.

NPSH value
The NPSH value above shows the required NPSH value of the pump $NPSH_{required}$. This value has to exceed the NPSH value of the system $NPSH_{available}$ with a minimum surcharge of 0.5m to exclude cavitation damages.
$NPSH_{available} \geq NPSH_{required} + 0.5$ m

Characteristic curves SK...33

50 Hz – 1450 min^{-1}

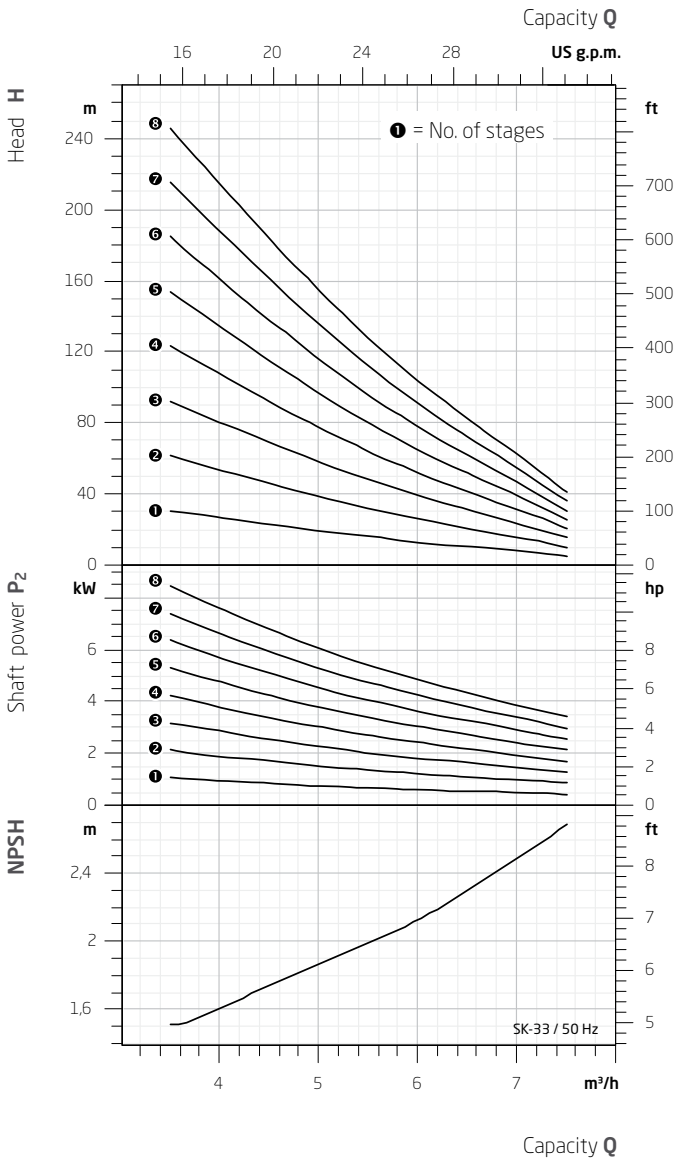

60 Hz – 1750 min^{-1}

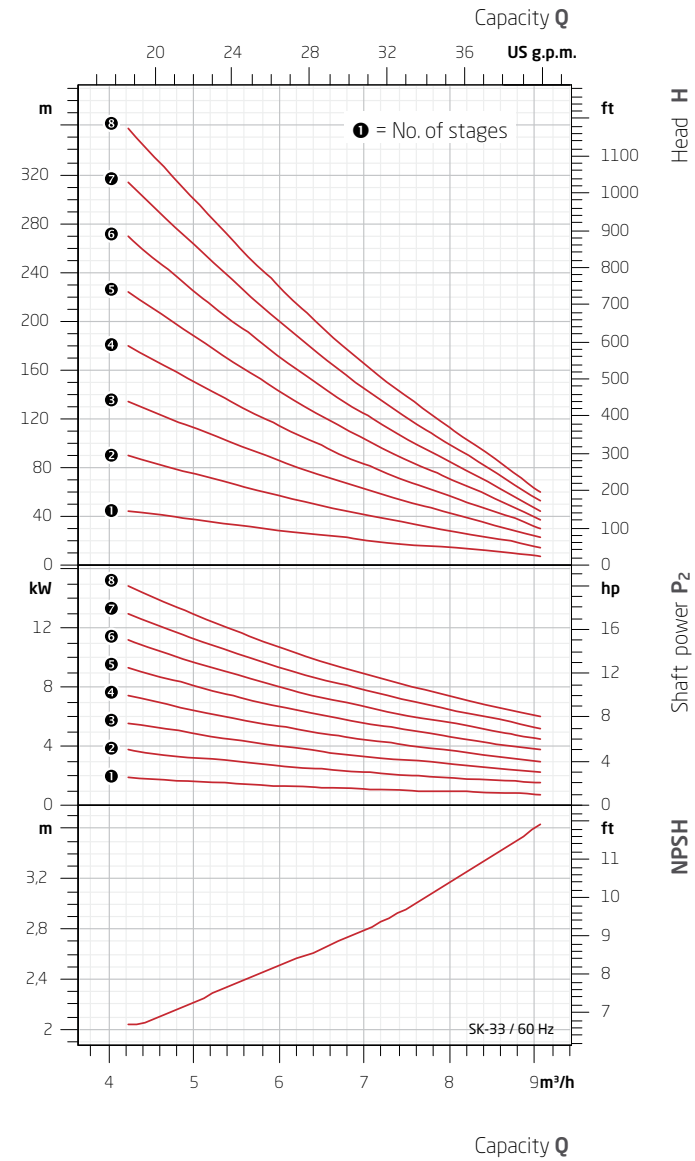

Binding characteristic curves only by SPAIX
These characteristic curves can be used to preselect a pump. They are deviating slightly depending on the material design. Only characteristic curves, which are specified with SPAIX configuration software can be referred to as binding.

Test conditions
The characteristic curves apply to the delivery of water with a temperature of 20 °C at nominal speed.

Tolerances
Flow rate ± 10 %, total head ± 10 %, power requirement + 10 %
Deviating properties of the media to be pumped affect the characteristic curves.

NPSH value
The NPSH value above shows the required NPSH value of the pump $NPSH_{required}$. This value has to exceed the NPSH value of the system $NPSH_{available}$ with a minimum surcharge of 0.5 m to exclude cavitation damages.
$NPSH_{available} \geq NPSH_{required} + 0.5$ m

Characteristic curves SK...40

50 Hz – 1450 min^{-1}

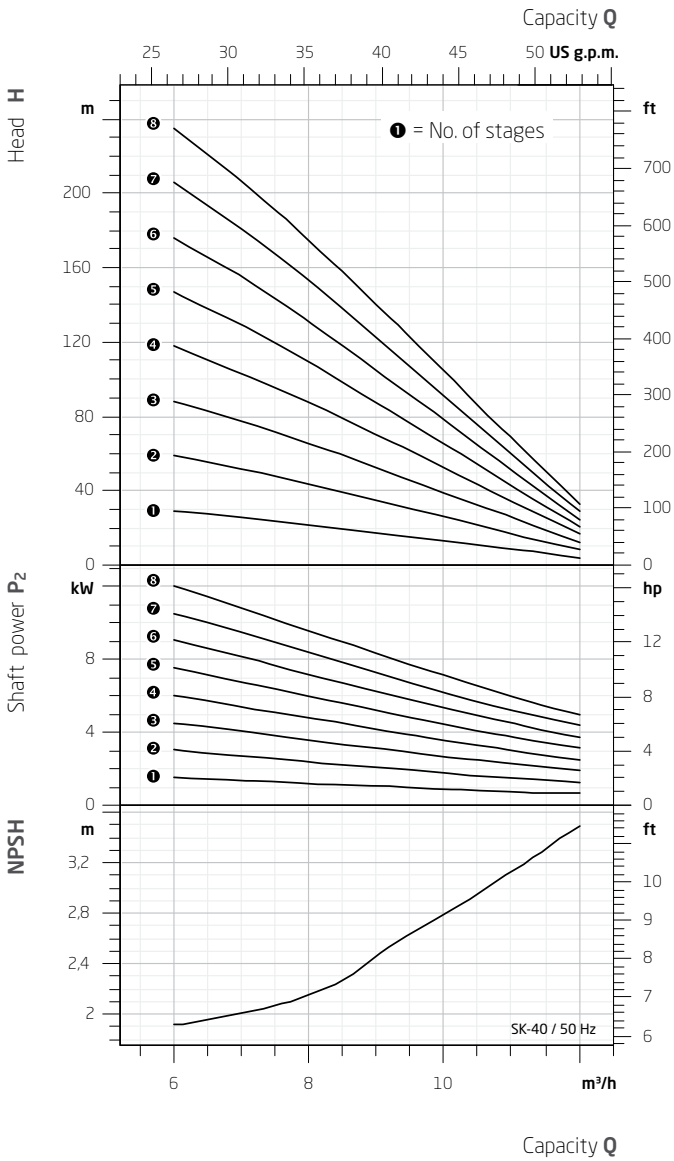

60 Hz – 1750 min^{-1}

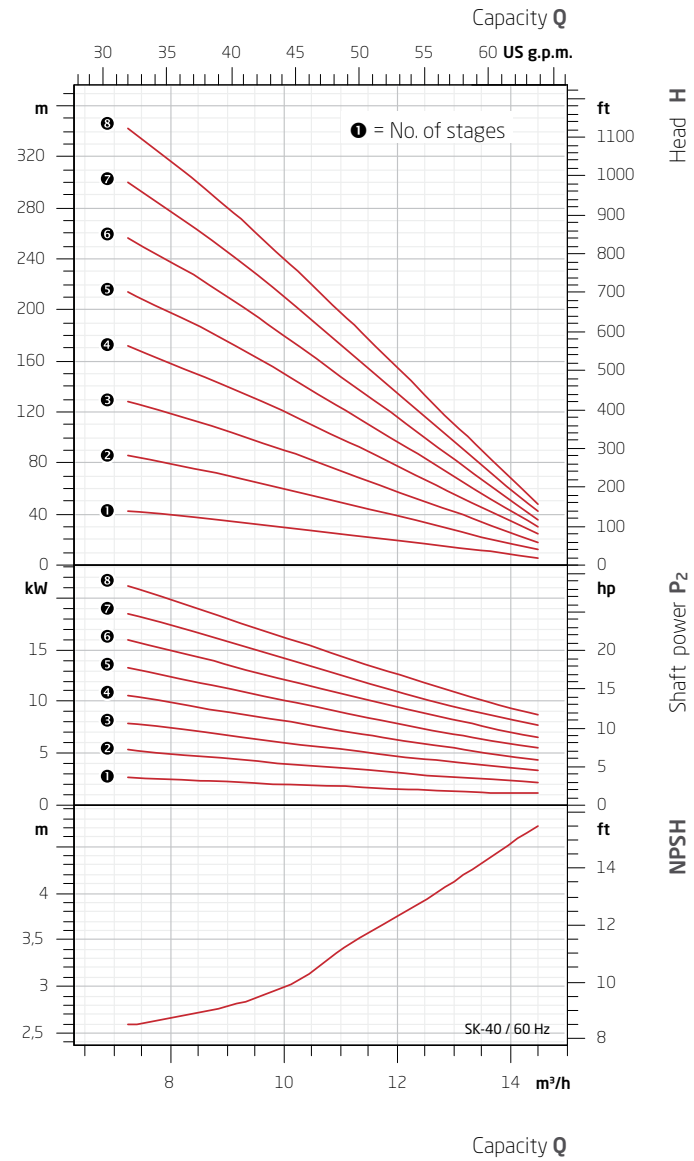

Binding characteristic curves only by SPAIX

These characteristic curves can be used to preselect a pump. They are deviating slightly depending on the material design. Only characteristic curves, which are specified with SPAIX configuration software can be referred to as binding.

Test conditions

The characteristic curves apply to the delivery of water with a temperature of 20 °C at nominal speed.

Tolerances

Flow rate ± 10 %, total head ± 10 %, power requirement + 10 %
Deviating properties of the media to be pumped affect the characteristic curves.

NPSH value

The NPSH value above shows the required NPSH value of the pump $NPSH_{required}$. This value has to exceed the NPSH value of the system $NPSH_{available}$ with a minimum surcharge of 0.5m to exclude cavitation damages.
$NPSH_{available} \geq NPSH_{required} + 0.5$ m

Characteristic curves SK...50

50 Hz – 1450 min^{-1}

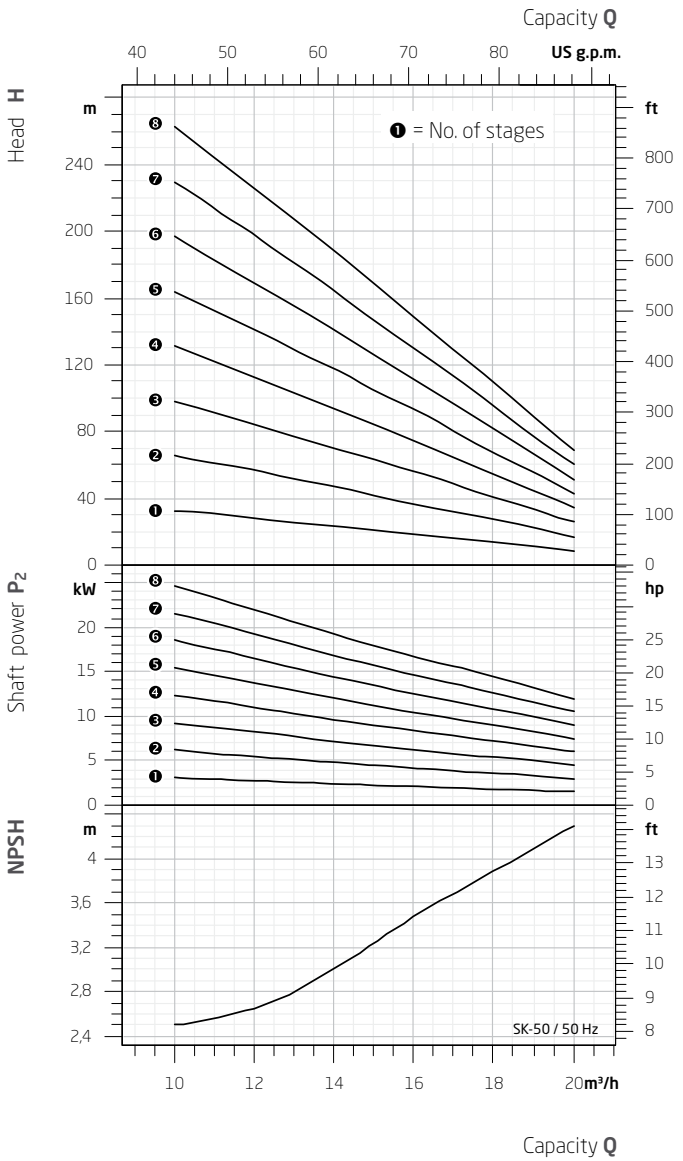

60 Hz – 1750 min^{-1}

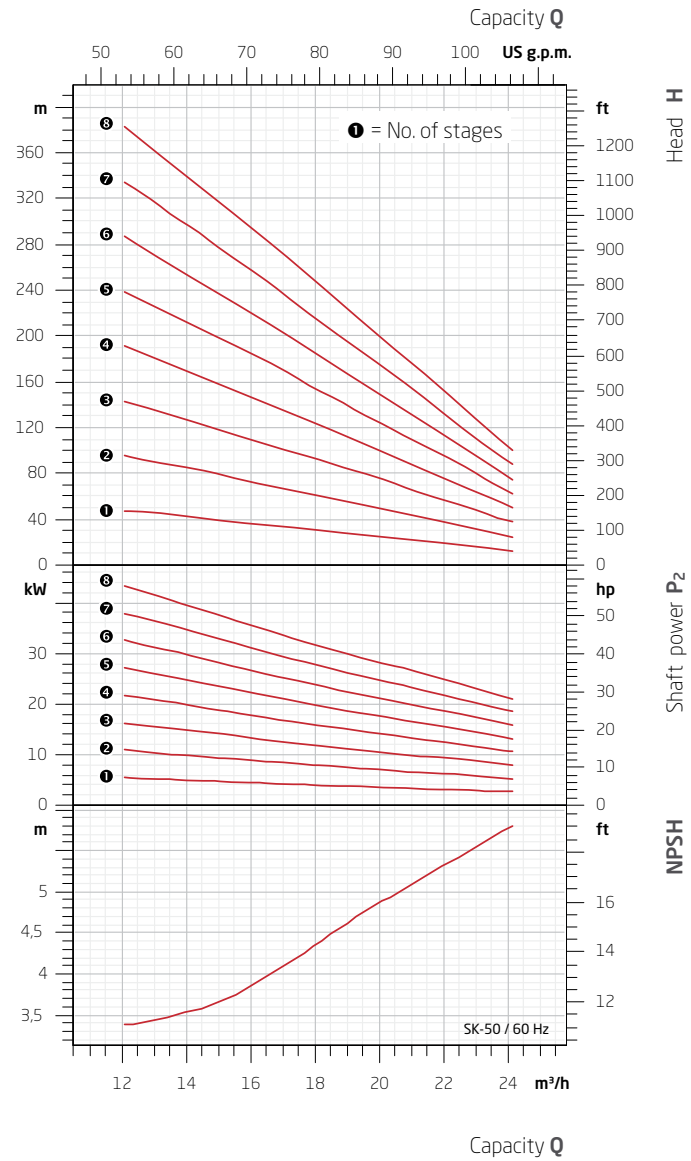

Binding characteristic curves only by SPAIX
These characteristic curves can be used to preselect a pump. They are deviating slightly depending on the material design. Only characteristic curves, which are specified with SPAIX configuration software can be referred to as binding.

Test conditions
The characteristic curves apply to the delivery of water with a temperature of 20 °C at nominal speed.

Tolerances
Flow rate ± 10 %, total head ± 10 %, power requirement + 10 %
Deviating properties of the media to be pumped affect the characteristic curves.

NPSH value
The NPSH value above shows the required NPSH value of the pump $NPSH_{required}$. This value has to exceed the NPSH value of the system $NPSH_{available}$ with a minimum surcharge of 0.5 m to exclude cavitation damages.
$NPSH_{available} \geq NPSH_{required} + 0.5$ m

Characteristic curves SK...65

50 Hz – 1450 min^{-1}

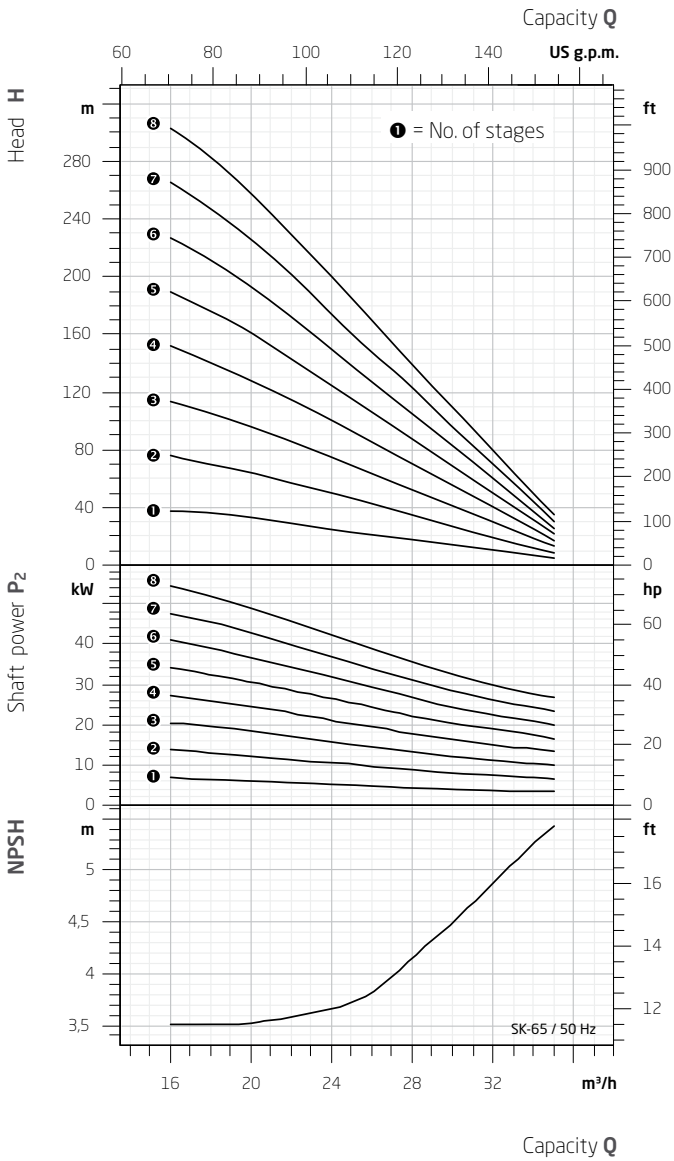

60 Hz – 1750 min^{-1}

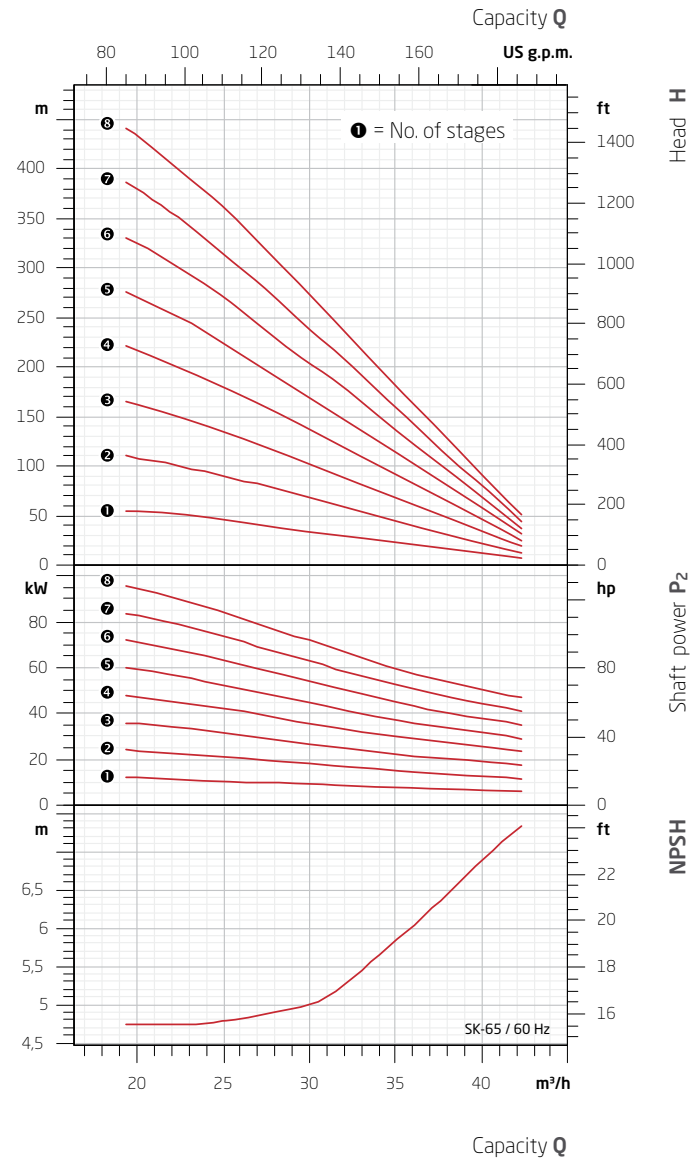

Binding characteristic curves only by SPAIX

These characteristic curves can be used to preselect a pump. They are deviating slightly depending on the material design. Only characteristic curves, which are specified with SPAIX configuration software can be referred to as binding.

Test conditions

The characteristic curves apply to the delivery of water with a temperature of 20 °C at nominal speed.

Tolerances

Flow rate ± 10 %, total head ± 10 %, power requirement + 10 %
Deviating properties of the media to be pumped affect the characteristic curves.

NPSH value

The NPSH value above shows the required NPSH value of the pump $NPSH_{required}$. This value has to exceed the NPSH value of the system $NPSH_{available}$ with a minimum surcharge of 0.5m to exclude cavitation damages.
$NPSH_{available} \geq NPSH_{required} + 0.5$ m

Characteristic curves ASK...20

50 Hz – 1450 min⁻¹

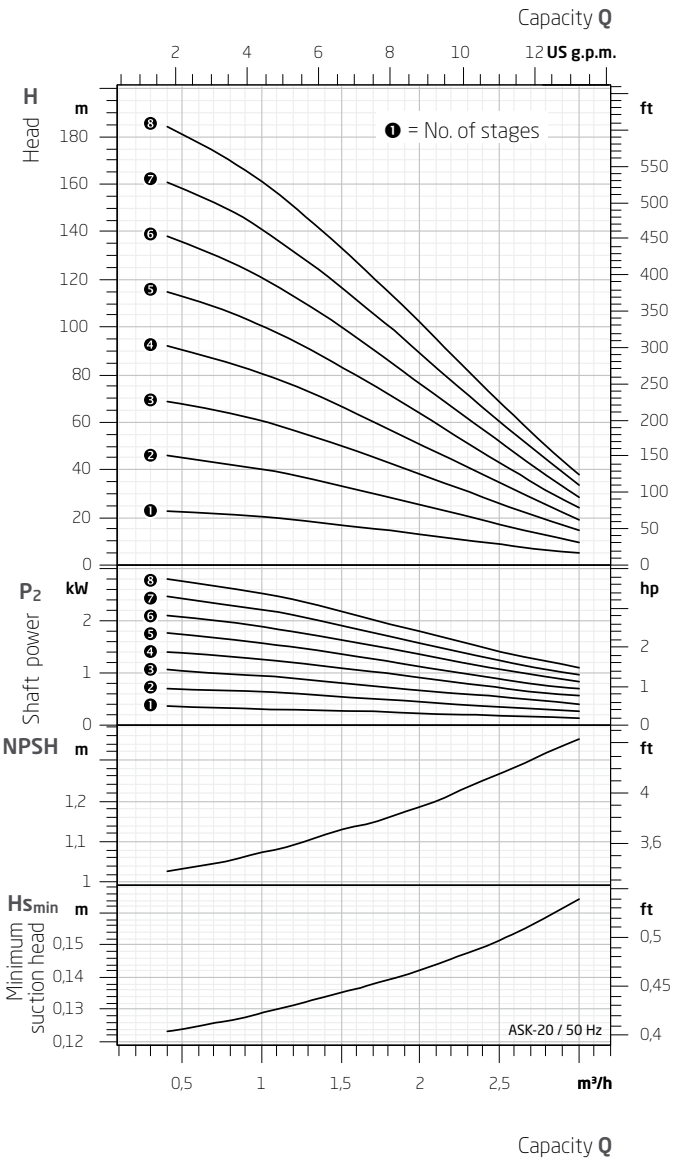

60 Hz – 1750 min⁻¹

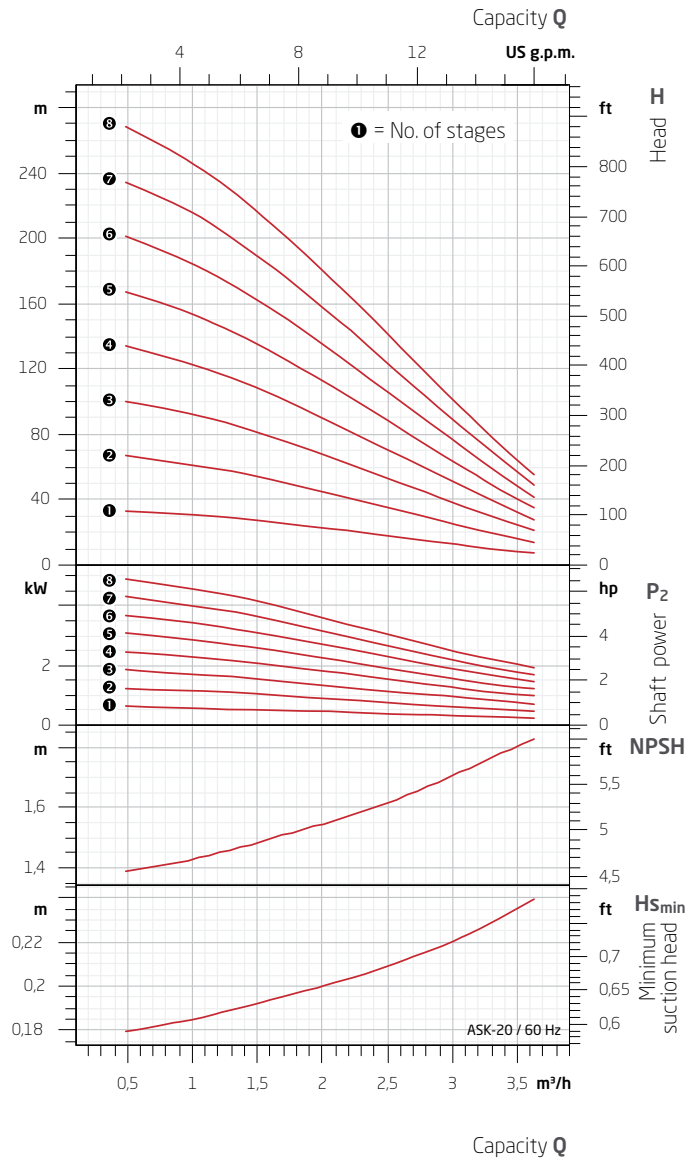

Binding characteristic curves only by SPAIX
These characteristic curves can be used to preselect a pump. They are deviating slightly depending on the material design. Only characteristic curves, which are specified with SPAIX configuration software can be referred to as binding.

Test conditions
The characteristic curves apply to the delivery of water with a temperature of 20 °C at nominal speed.

Tolerances
Flow rate ± 10 %, total head ± 10 %, power requirement + 10 %
Deviating properties of the media to be pumped affect the characteristic curves.

NPSH value
The NPSH value above shows the required NPSH value of the pump $NPSH_{required}$. This value has to exceed the NPSH value of the system $NPSH_{available}$ with a minimum surcharge of 0.5 m to exclude cavitation damages.
$NPSH_{available} \geq NPSH_{required} + 0.5$ m

Minimum suction head
The intake pressure (Hs_{min}) above is valid for closed systems with boiling liquids and short feed lines.
$NPSH_{required} \geq NPSH_{available} \geq Hs_{min}$ may cause a pressure drop and excessive vibrations.

A drop in the pump performance is caused by the delivery of gas shares at temperatures over the boiling point.
$NPSH_{available} > Hs_{min}$.

Characteristic curves ASK...32

50 Hz – 1450 min^{-1}

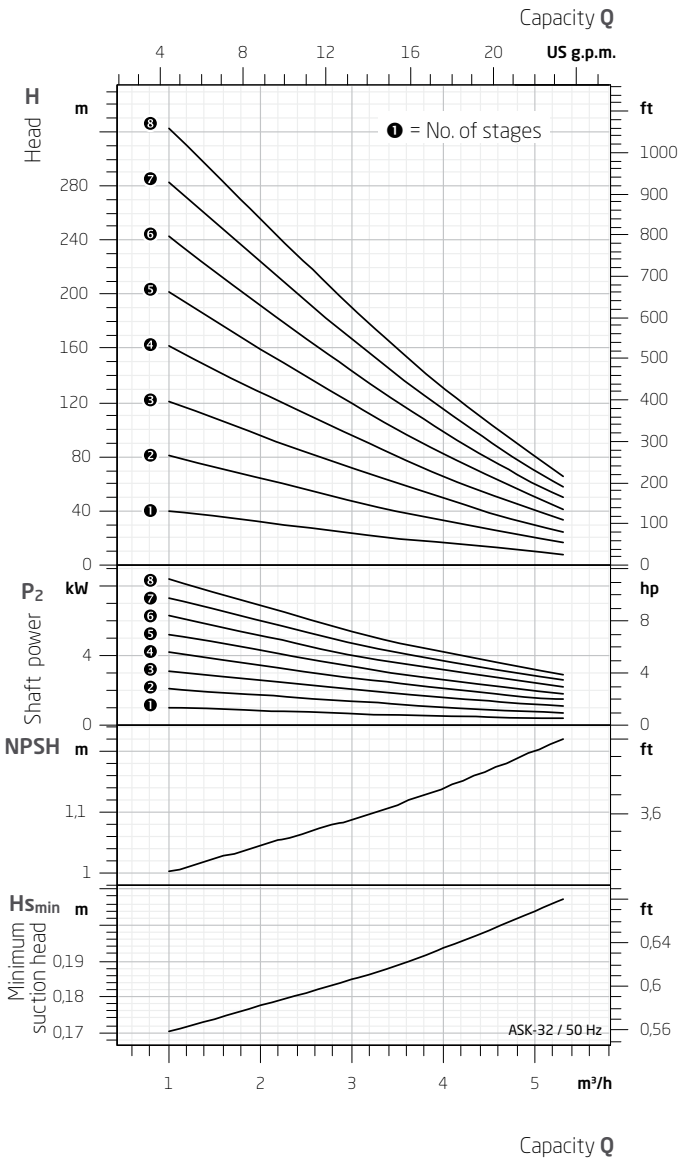

60 Hz – 1750 min^{-1}

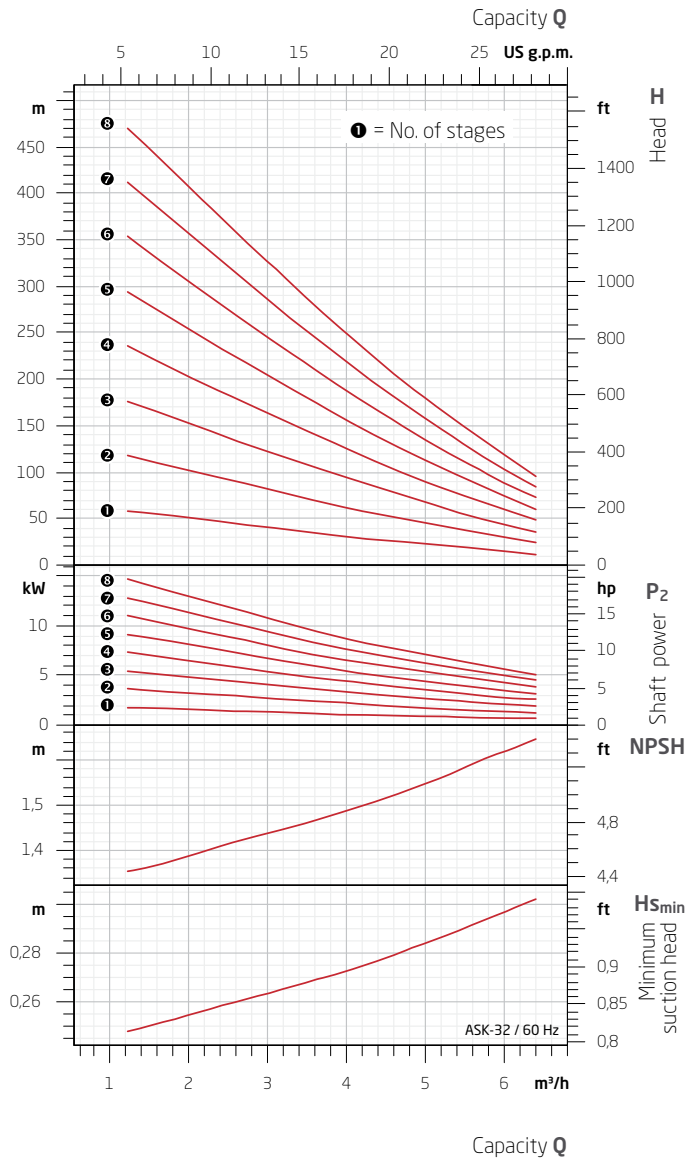

Binding characteristic curves only by SPAIX

These characteristic curves can be used to preselect a pump. They are deviating slightly depending on the material design. Only characteristic curves, which are specified with SPAIX configuration software can be referred to as binding.

Test conditions

The characteristic curves apply to the delivery of water with a temperature of 20 °C at nominal speed.

Tolerances

Flow rate ± 10 %, total head ± 10 %, power requirement + 10 %
Deviating properties of the media to be pumped affect the characteristic curves.

NPSH value

The NPSH value above shows the required NPSH value of the pump $NPSH_{required}$. This value has to exceed the NPSH value of the system $NPSH_{available}$ with a minimum surcharge of 0.5 m to exclude cavitation damages.
$NPSH_{available} \geq NPSH_{required} + 0.5$ m

Minimum suction head

The intake pressure (Hs_{min}) above is valid for closed systems with boiling liquids and short feed lines.
$NPSH_{available} \geq NPSH_{required} \geq Hs_{min}$ may cause a pressure drop and excessive vibrations.

A drop in the pump performance is caused by the delivery of gas shares at temperatures over the boiling point.
$NPSH_{available} > Hs_{min}$.

Characteristic curves ASK...33

50 Hz – 1450 min⁻¹

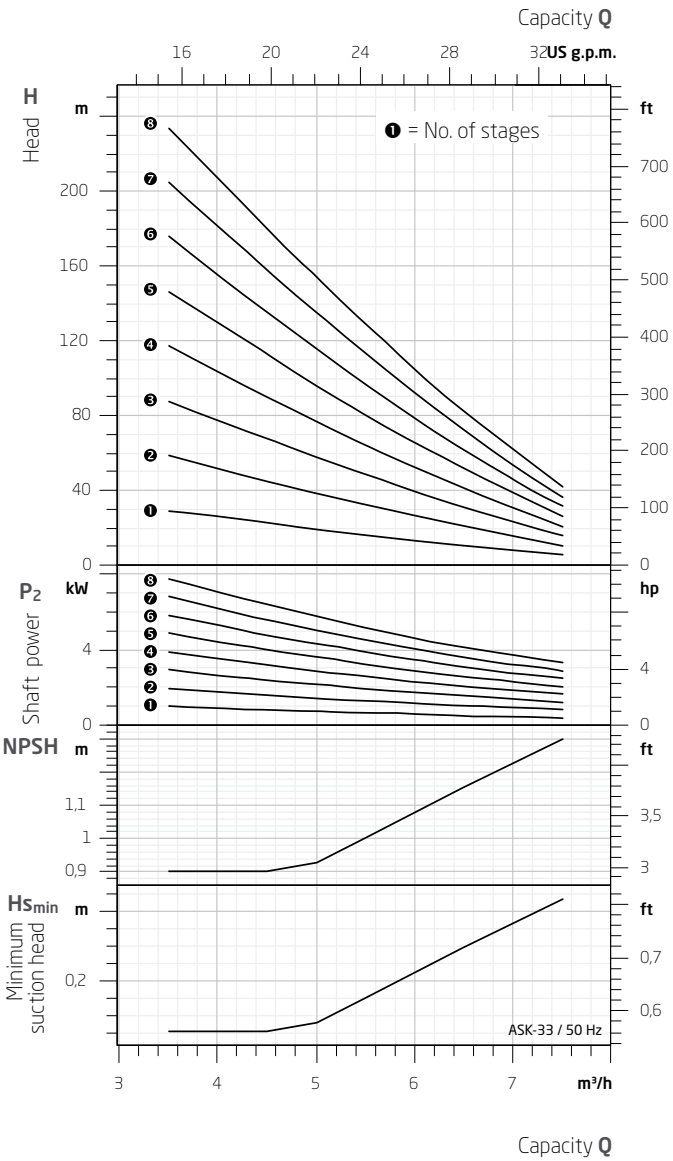

60 Hz – 1750 min⁻¹

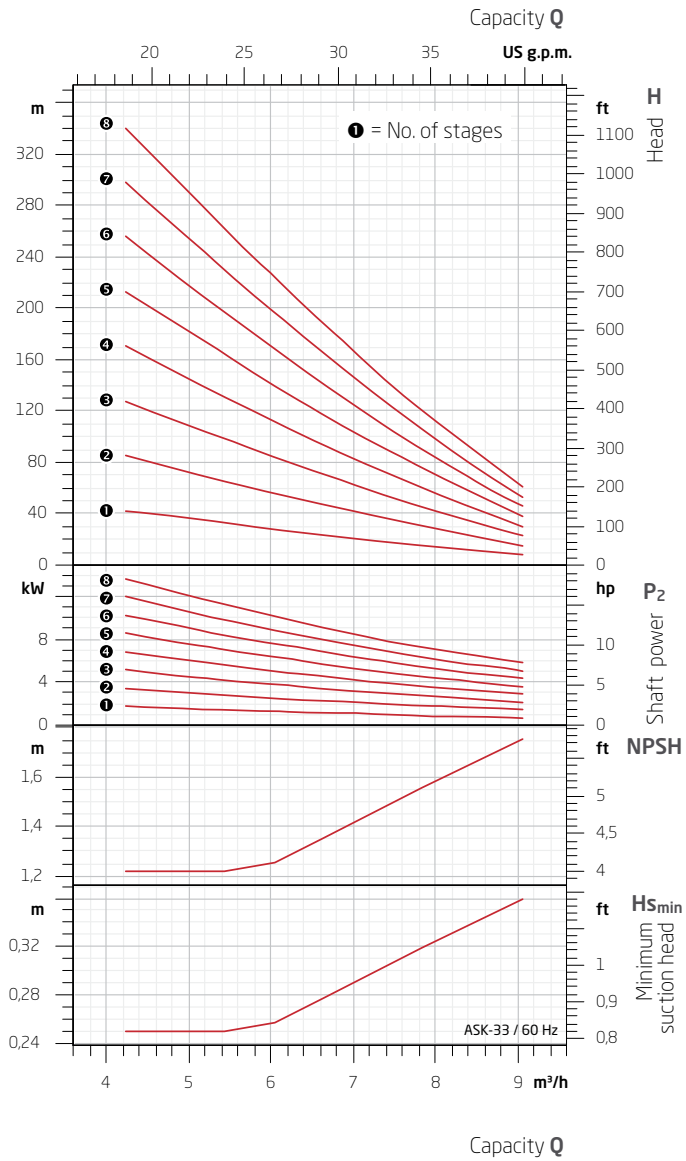

Binding characteristic curves only by SPAIX
These characteristic curves can be used to preselect a pump. They are deviating slightly depending on the material design. Only characteristic curves, which are specified with SPAIX configuration software can be referred to as binding.

Test conditions
The characteristic curves apply to the delivery of water with a temperature of 20 °C at nominal speed.

Tolerances
Flow rate ± 10 %, total head ± 10 %, power requirement + 10 %
Deviating properties of the media to be pumped affect the characteristic curves.

NPSH value
The NPSH value above shows the required NPSH value of the pump $NPSH_{required}$. This value has to exceed the NPSH value of the system $NPSH_{available}$ with a minimum surcharge of 0.5 m to exclude cavitation damages.
$NPSH_{available} \geq NPSH_{required} + 0.5$ m

Minimum suction head
The intake pressure (Hs_{min}) above is valid for closed systems with boiling liquids and short feed lines.
$NPSH_{required} \geq NPSH_{available} \geq Hs_{min}$ may cause a pressure drop and excessive vibrations.

A drop in the pump performance is caused by the delivery of gas shares at temperatures over the boiling point.
$NPSH_{available} > Hs_{min}$.

Characteristic curves ASK...40

50 Hz – 1450 min^{-1}

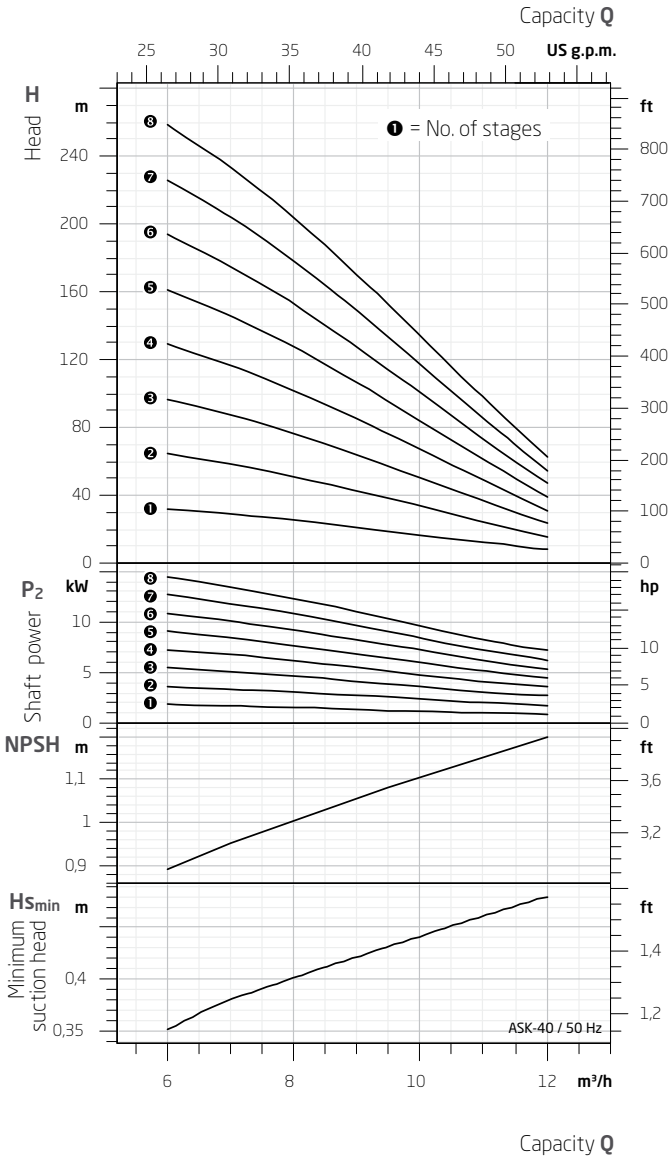

60 Hz – 1750 min^{-1}

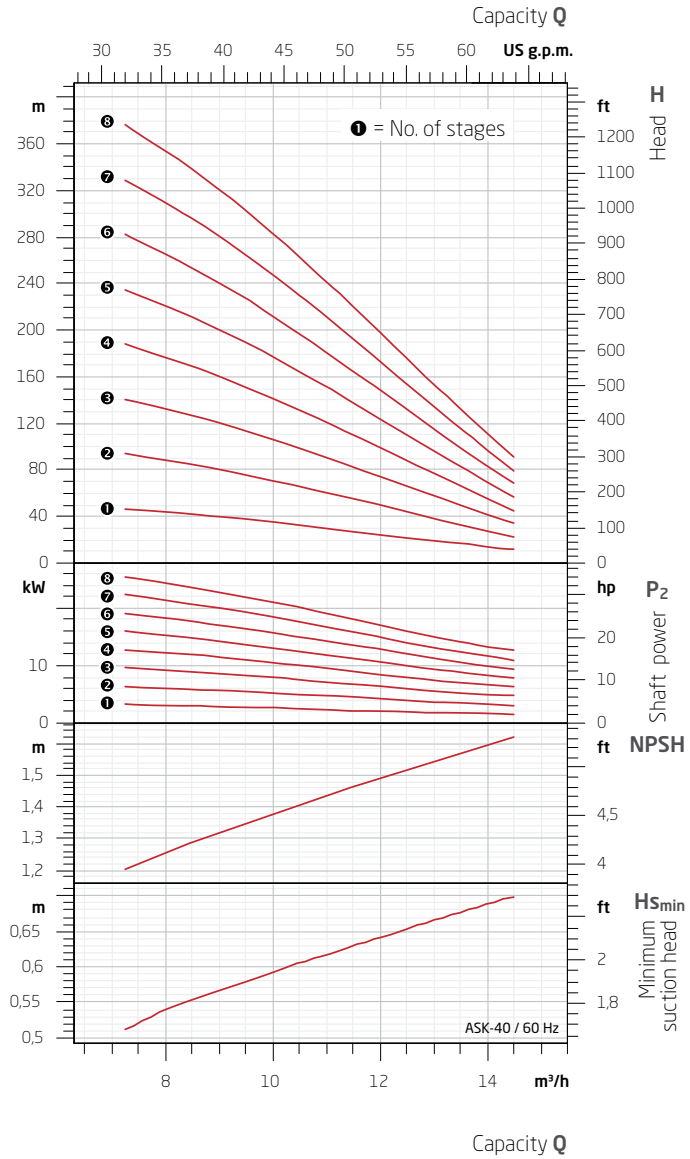

Binding characteristic curves only by SPAIX

These characteristic curves can be used to preselect a pump. They are deviating slightly depending on the material design. Only characteristic curves, which are specified with SPAIX configuration software can be referred to as binding.

Test conditions

The characteristic curves apply to the delivery of water with a temperature of 20 °C at nominal speed.

Tolerances

Flow rate ± 10 %, total head ± 10 %, power requirement + 10 %
Deviating properties of the media to be pumped affect the characteristic curves.

NPSH value

The NPSH value above shows the required NPSH value of the pump $NPSH_{required}$. This value has to exceed the NPSH value of the system $NPSH_{available}$ with a minimum surcharge of 0.5 m to exclude cavitation damages.
$NPSH_{available} \geq NPSH_{required} + 0.5$ m

Minimum suction head

The intake pressure (Hs_{min}) above is valid for closed systems with boiling liquids and short feed lines.
$NPSH_{available} \geq NPSH_{required} \geq Hs_{min}$ may cause a pressure drop and excessive vibrations.

A drop in the pump performance is caused by the delivery of gas shares at temperatures over the boiling point.
$NPSH_{available} > Hs_{min}$.

Characteristic curves ASK...50

50 Hz – 1450 min^{-1}

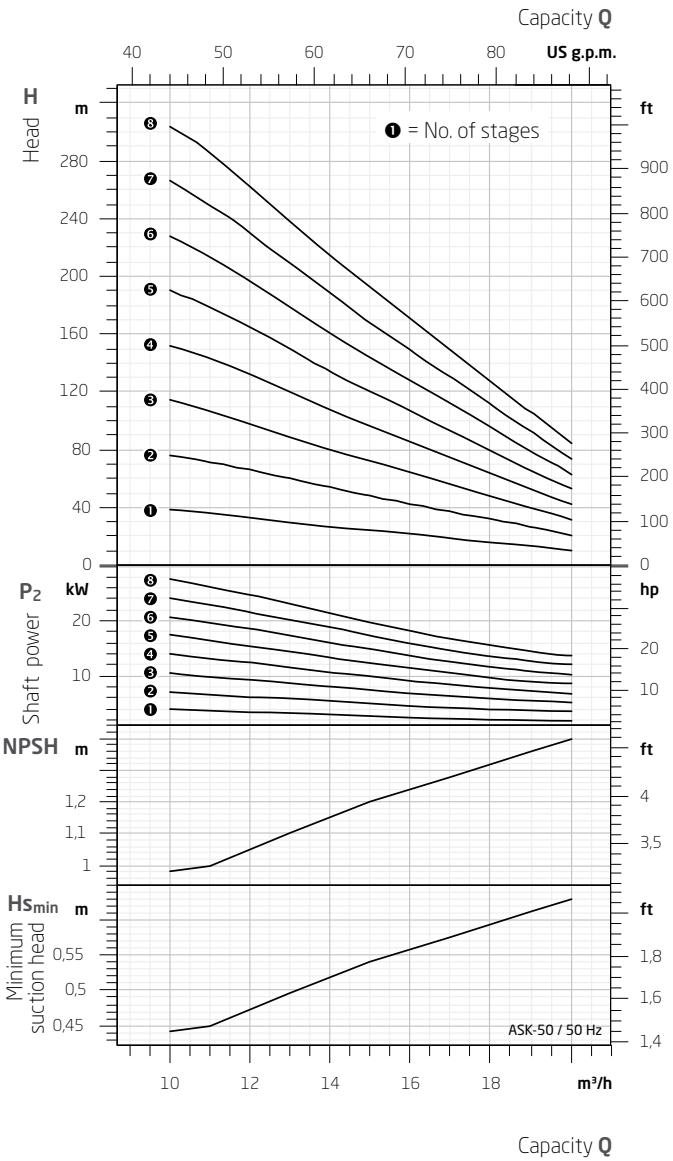

60 Hz – 1750 min^{-1}

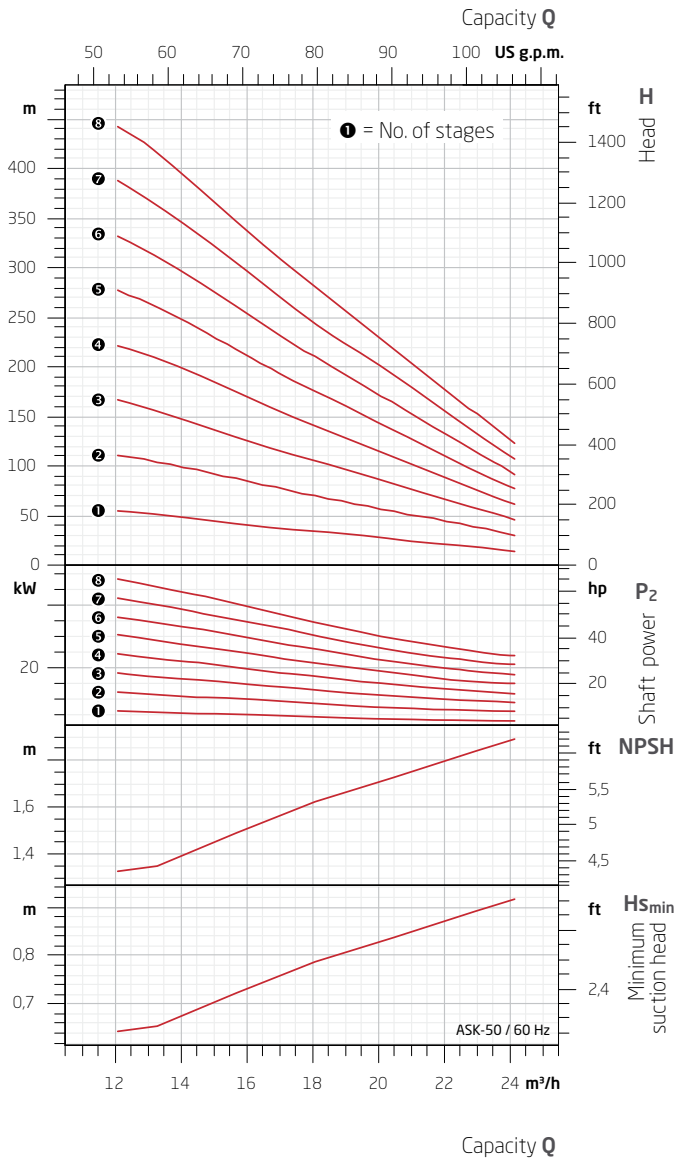

Binding characteristic curves only by SPAIX
These characteristic curves can be used to preselect a pump. They are deviating slightly depending on the material design. Only characteristic curves, which are specified with SPAIX configuration software can be referred to as binding.

Test conditions
The characteristic curves apply to the delivery of water with a temperature of 20 °C at nominal speed.

Tolerances
Flow rate ± 10 %, total head ± 10 %, power requirement + 10 %
Deviating properties of the media to be pumped affect the characteristic curves.

NPSH value
The NPSH value above shows the required NPSH value of the pump $NPSH_{required}$. This value has to exceed the NPSH value of the system $NPSH_{available}$ with a minimum surcharge of 0.5 m to exclude cavitation damages.
$NPSH_{available} \geq NPSH_{required} + 0.5$ m

Minimum suction head
The intake pressure (Hs_{min}) above is valid for closed systems with boiling liquids and short feed lines.
$NPSH_{required} \geq NPSH_{available} \geq Hs_{min}$ may cause a pressure drop and excessive vibrations.

A drop in the pump performance is caused by the delivery of gas shares at temperatures over the boiling point.
$NPSH_{available} > Hs_{min}$.

Characteristic curves ASK...65

50 Hz – 1450 min^{-1}

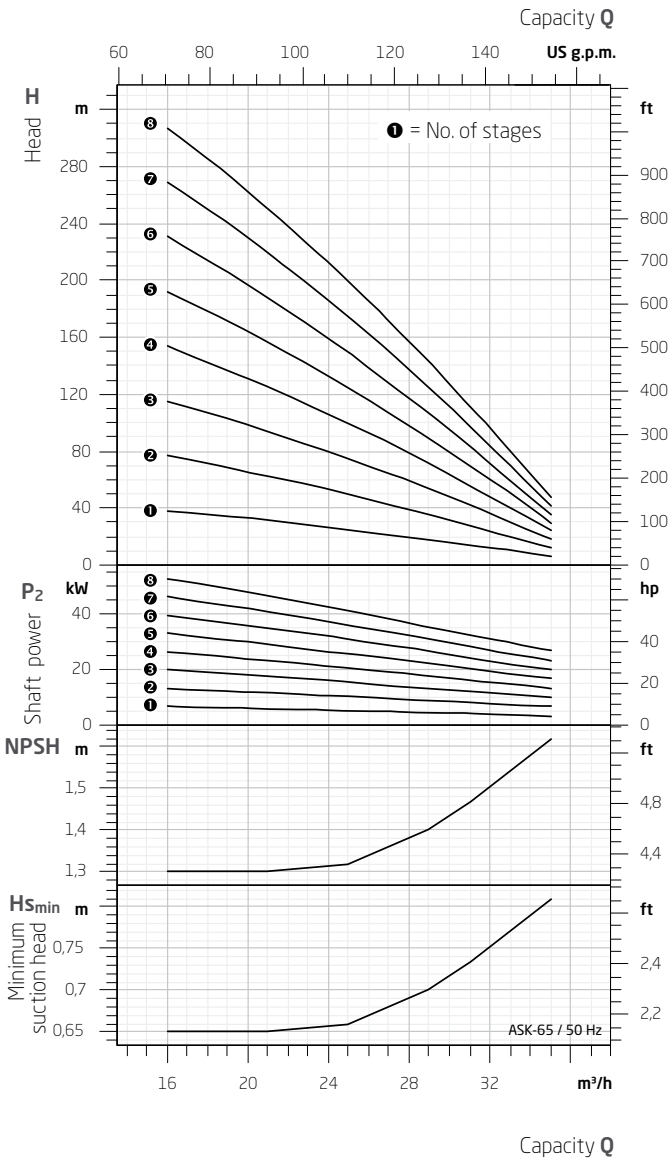

60 Hz – 1750 min^{-1}

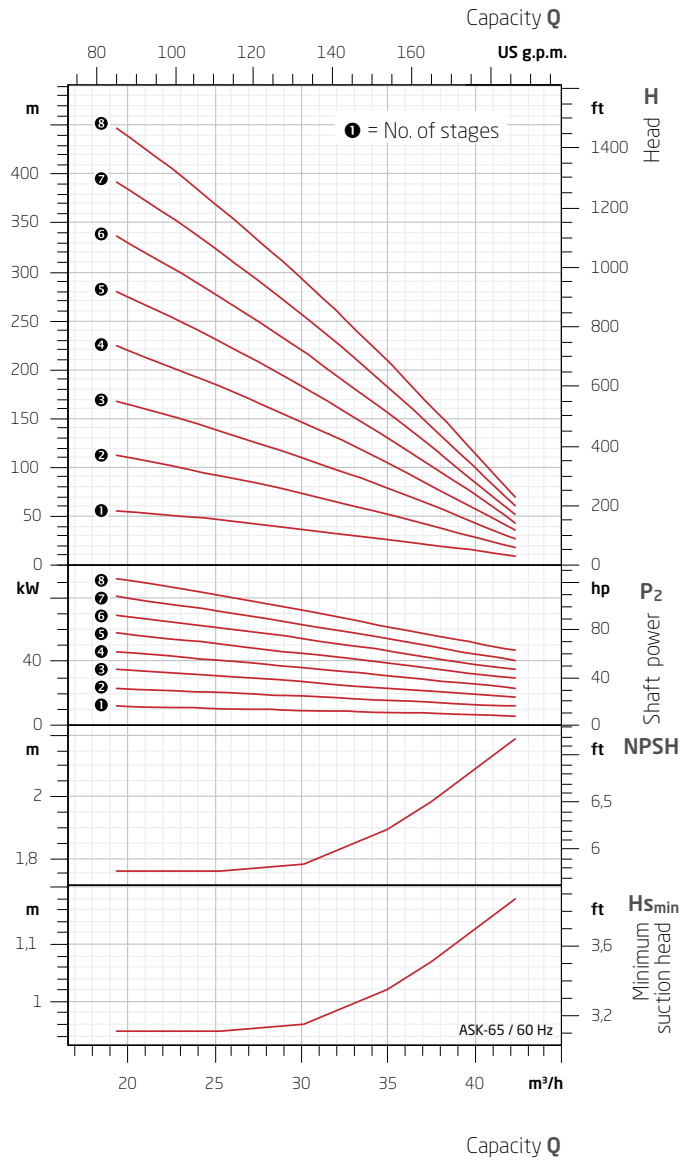

Binding characteristic curves only by SPAIX
These characteristic curves can be used to preselect a pump. They are deviating slightly depending on the material design. Only characteristic curves, which are specified with SPAIX configuration software can be referred to as binding.

Test conditions
The characteristic curves apply to the delivery of water with a temperature of 20 °C at nominal speed.

Tolerances
Flow rate ± 10 %, total head ± 10 %, power requirement + 10 %
Deviating properties of the media to be pumped affect the characteristic curves.

NPSH value
The NPSH value above shows the required NPSH value of the pump $NPSH_{required}$. This value has to exceed the NPSH value of the system $NPSH_{available}$ with a minimum surcharge of 0.5 m to exclude cavitation damages.
$NPSH_{available} \geq NPSH_{required} + 0.5$ m

Minimum suction head
The intake pressure (Hs_{min}) above is valid for closed systems with boiling liquids and short feed lines.
$NPSH_{available} \geq NPSH_{required} \geq Hs_{min}$ may cause a pressure drop and excessive vibrations.

A drop in the pump performance is caused by the delivery of gas shares at temperatures over the boiling point.
$NPSH_{available} > Hs_{min}$.