UMBROSA

UNIQUE SHADE DESIGN

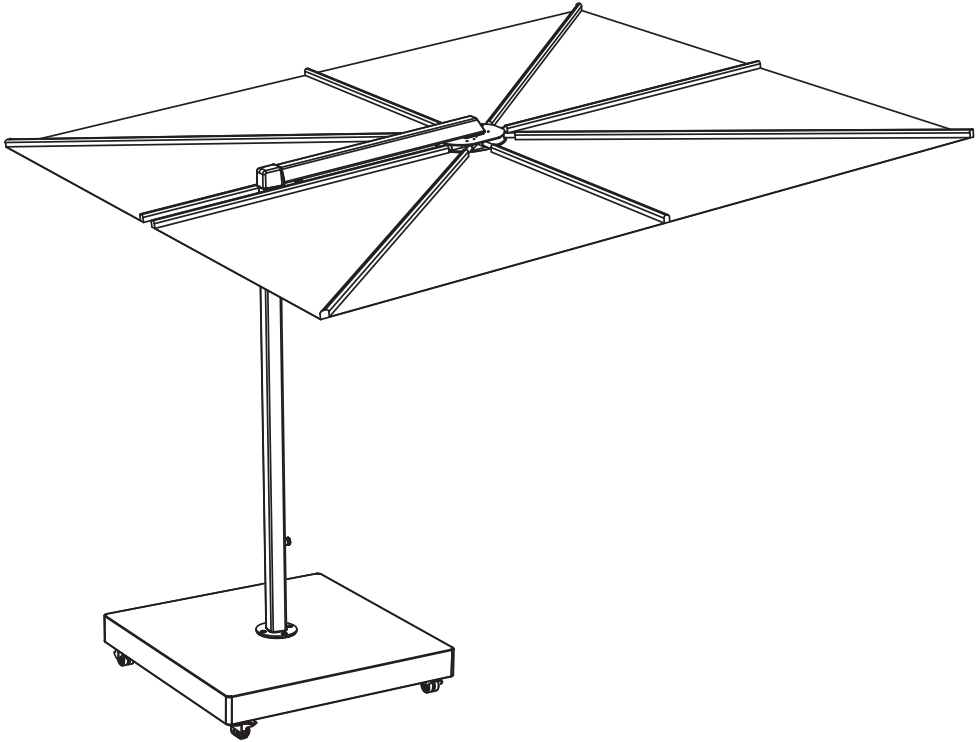

INSTALLATION MOVIES

NANO UX DEMO MOVIE

NANO UX

UMBROSA
UNIQUE SHADE DESIGN

UMBROSA.COM

ENG Congratulations with your purchase! Please completely read and follow all the instructions.
NL Proficiat met uw aankoop! Gelieve alle instructies te lezen en op te volgen.
FR Félicitations avec votre achat. Lisez svp les instructions complètes.
DE Herzlichen Glückwunsch zu Ihrem Kauf! Bitte vollständig lesen und befolgen Sie alle Anweisungen.
ES Felicidades con su compra! Por favor lea y siga todas las instrucciones.
IT Congratulazioni con il Vs. acquisto! Vi preghiamo di leggere bene le istruzioni e di seguirne scrupolosamente le indicazioni.

IMPORTANT:
Please read this entire manual before installing or operating your umbrella, to reduce risk of personal injury in which a person is injured or harmed, and/or damage to personal property. Prior to assembly it is important to decide on the location of the umbrella and to respect the following instructions:

- Choose a location that is level and sturdy.
- Avoid any sloping of soft ground.
- Consider a location that will maximize the umbrella's 360° rotating function (if available)
- Two-person team is recommended for assembly

BEFORE YOU START

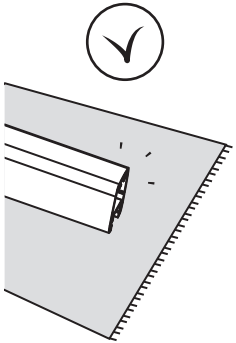

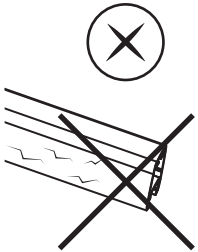

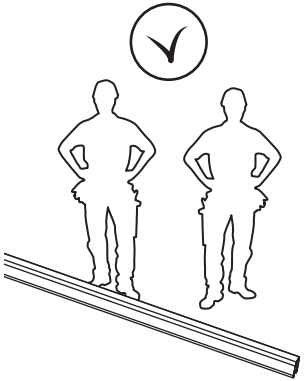

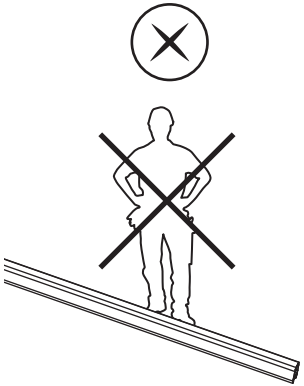

SAFETY STATEMENTS & WARNINGS

- Product is suitable for light wind and/or light rain only.
- Position product in direction of wind as recommended in user manual.
- Do not use product in inclement weather, such as strong wind, thunderstorms, heavy rain or snow, and make sure that the umbrella is closed and stored in advance.
- Never allow the umbrella to flap in the wind. This could cause personal injury, damage to personal property, damage to umbrella and/or umbrella canopy.
- Close product and secure strap when not in use.
- Do not use product without its base or unless attached to building structure, and keep umbrella secured to umbrella base or mount at all times.
- Do not use product over or near harsh chemicals or open flames.
- Place product on stable and level surface.
- Do not allow children to assemble or operate product.
- Do not leave product unattended.
- Store product indoors during winter and extreme weather conditions.
- When adjusting or assembling the umbrella or umbrella base, make sure fingers, toes or any other parts of the body are clear from moving parts. Failing to do so may result in serious injury.
- Only use Umbrosa replacement parts.
- Read owner's manual.
- Any modifications to the product or failure to follow recommended care will void the warranty.
- Wind damage is not covered under our limited warranty.

DISCLAIMER:

All mounting kits and supports for inground fitting and installation on hard surfaces should only be installed by a licensed contractor duly qualified to perform the installation. Umbrosa assumes no liabilities and expressly disclaims any responsibilities for injuries or damages arising from or related to the failure of buyer to have any kit or fitting installed by a licensed professional contractor.

INDEX

MEDIUM TILE BASE p7

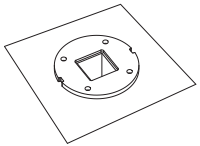

CONCRETE ANCHOR p14

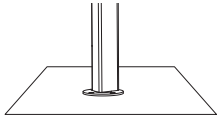

GROUND MOUNTING p18

NANO UX INSTALLATION p19

USER INSTRUCTIONS p25

TIPS AND MAINTENANCE p29

WARRANTY AND SPARE PARTS p32

INSTALLATION DIMENSIONS

FLOOR PLATE

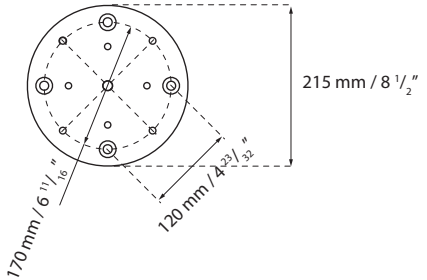

SUPPORT

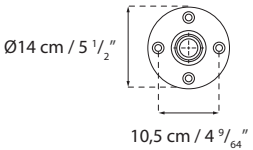

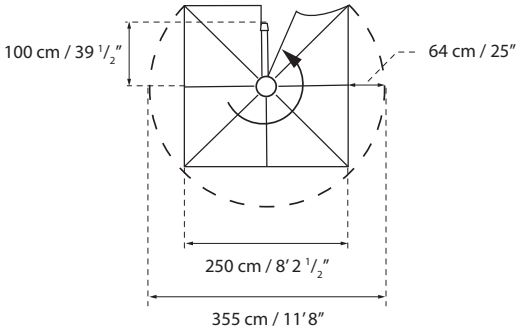

MEDIUM TILE BASE INSTALLATION

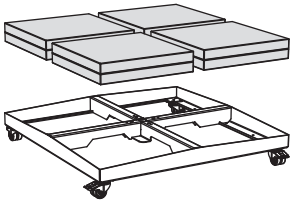

8 TILES
(MIN. WEIGHT 110 KG / 242 Lbs)

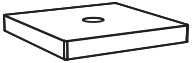

COVER MEDIUM
ALU-COVERN-M-TBASE

4x

M10x60
MABOLI0980

2x

FRAME SPACER M
UMFRATBCR35_V1_HDG

BASE TILE DIMENSIONS

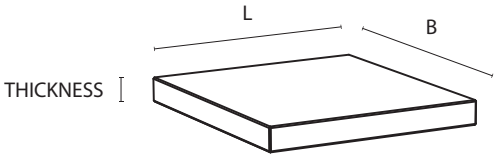

	MINIMUM	MAXIMUM
LxB	38 x 38 cm	40 x 40 cm
	15”x 15“	16”x 16”
THICKNESS	38 mm	45 mm
	1 $^{1}/_{2}$”	1 $^{3}/_{4}$”

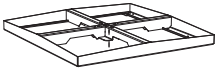

FRAME M
UMFRATB_V1_HDG

4x

WHEEL
MACOMU005D

4x 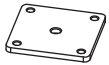

WHEEL PLATE
UMFIXG0020_V1

16x

M16
MABOLI0200

16x

TILE SPACERS
MACOMU064_B

1x TOOL
MACOMU65

1x
S4 + S6

TILE BASE INSTALLATION

1

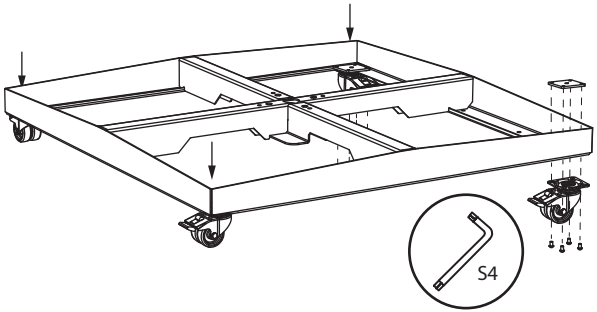

PUNCH GALVANISATION LAYER IN HOLES IF NECESSARY

2

MEDIUM BASE: START WITH 1 LAYER

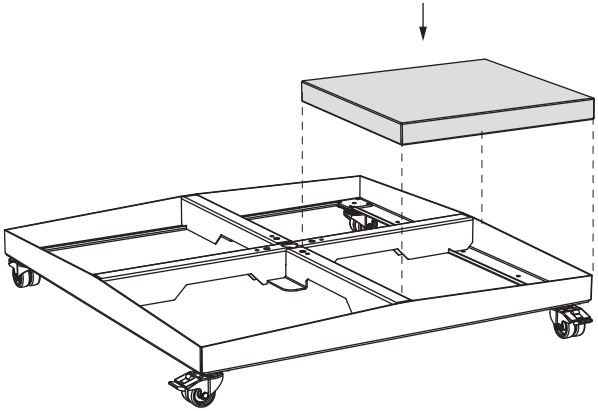

TILE BASE INSTALLATION

3

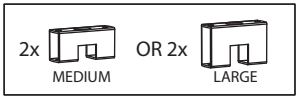

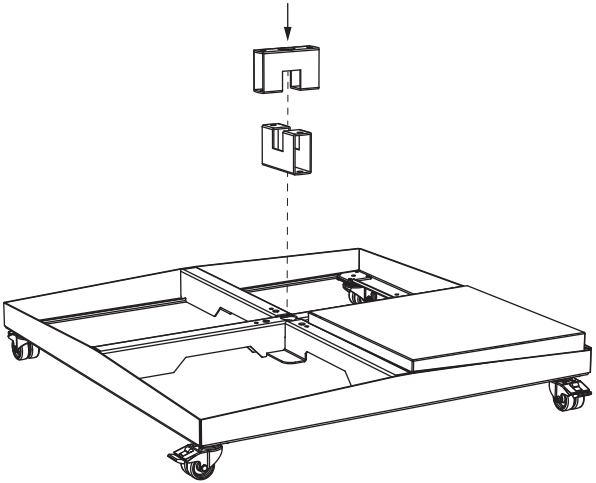

4

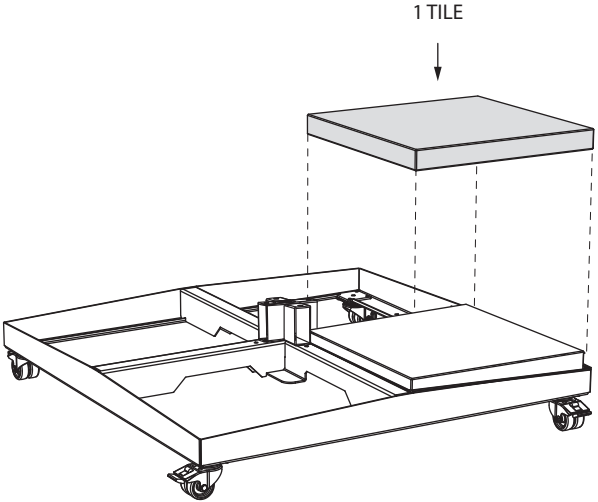

5

1x

ADD **SPACERS** FOR PERFECT COVER ALIGNMENT:

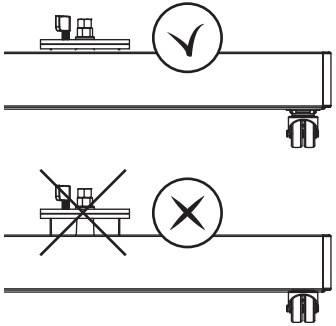

USE THE **TOOL** TO DEFINE THE **AMOUNT OF SPACERS**

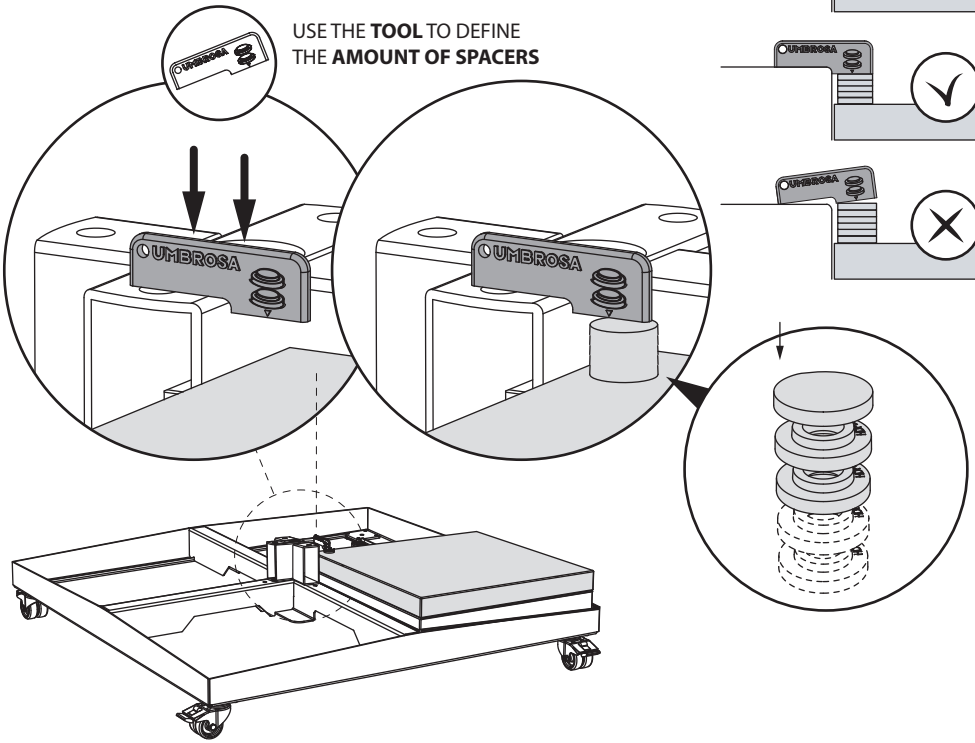

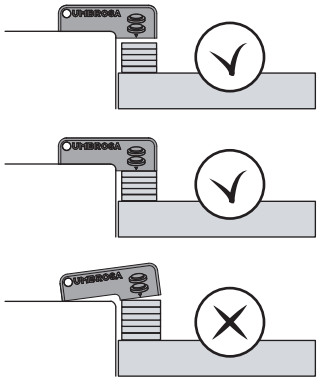

6

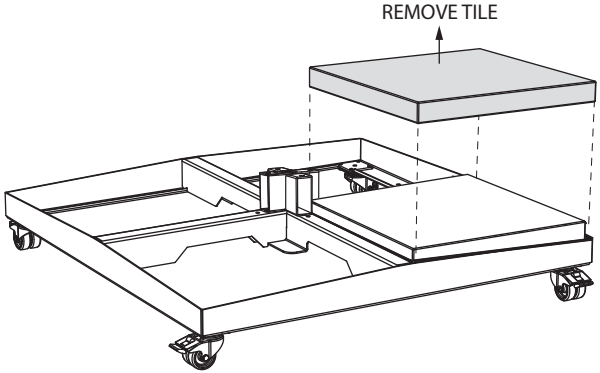

7

MEDIUM BASE: 1 LAYER
LARGE BASE: 2 LAYERS

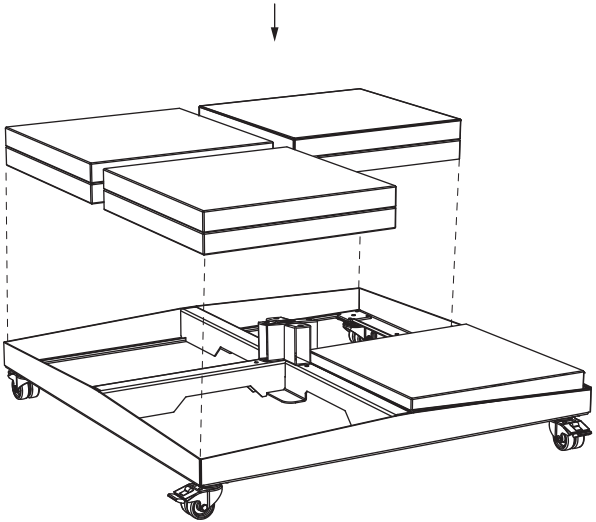

8

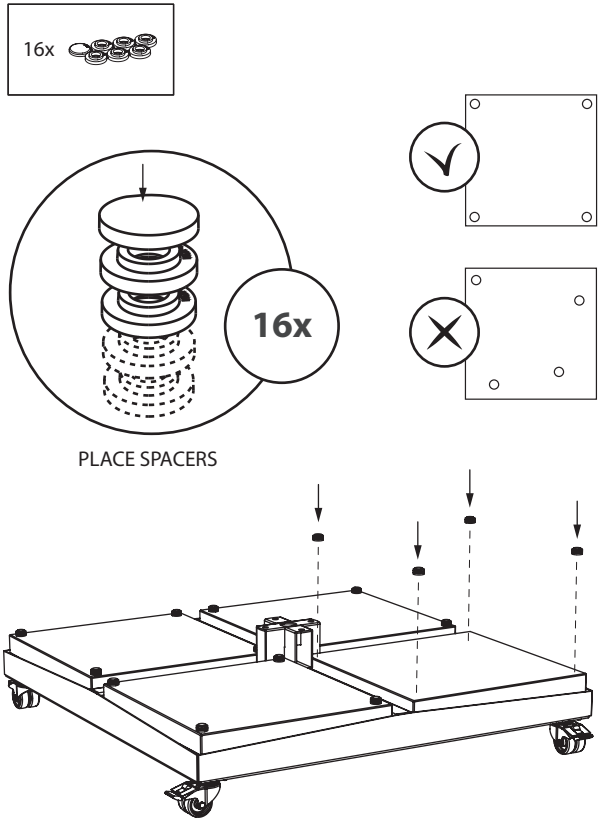

9

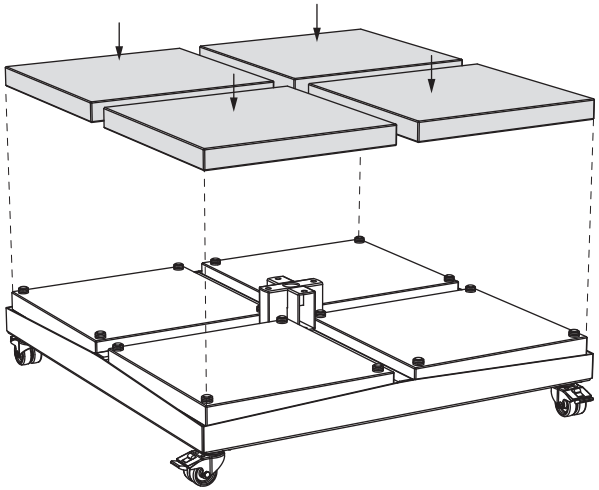

10

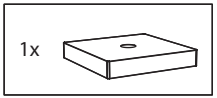

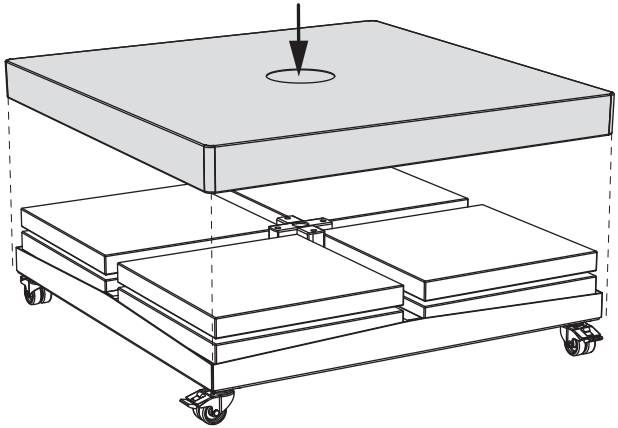

11

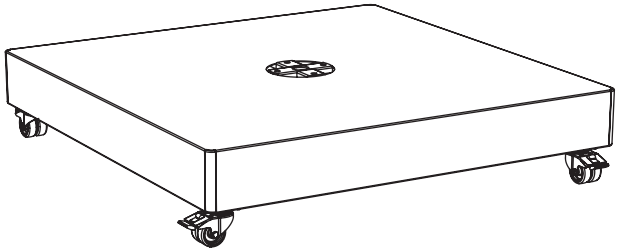

CONCRETE ANCHOR INSTALLATION

INGROUNDANCHORTYPE1

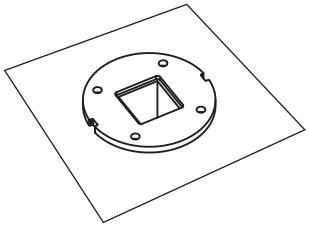

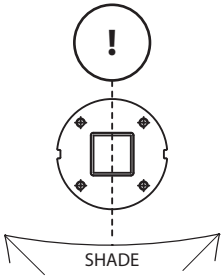

INGROUNDANCHOR TYPE1

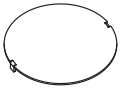

MAPLAICROTCAP20

1

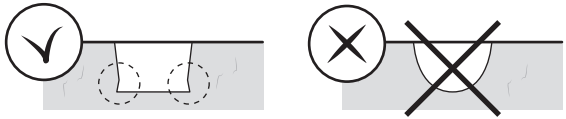

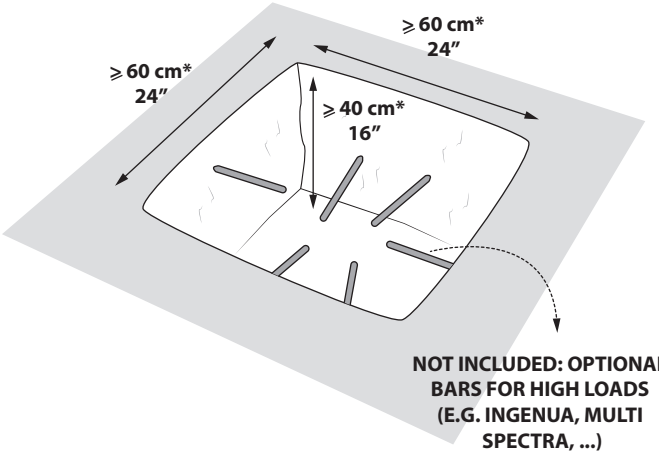

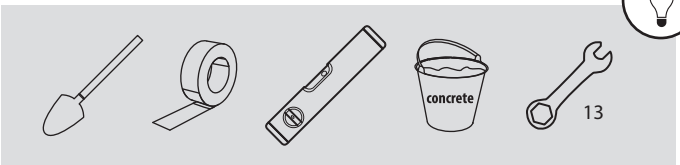

ENG Dimensions are indicative. Final responsibility always lies with the installer.
NL Maten zijn informatief. Eindverantwoordelijkheid ligt bij installateur.
FR Les dimensions indiquées sont seulement à titre informatif. La responsabilité finale incombe à l’installateur.
DE Die Maße sind nur informativ. Der Installateur trägt die Verantwortung für die Ausführung.
ES Los tamaños son sólamente informativos. El instalador es responsable del acabado final.
IT Dimensioni sono indicative. La responsabilità finale spetta sempre all’installatore.

2

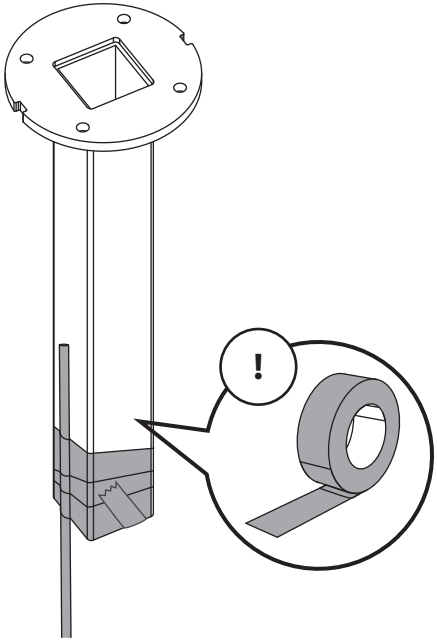

3

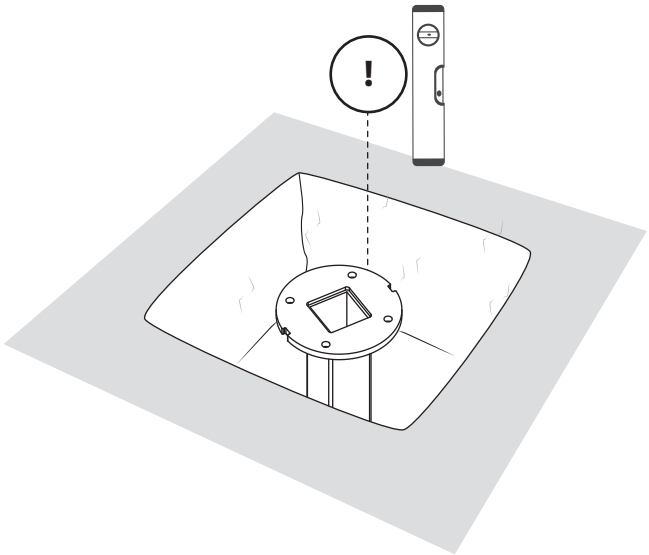

4

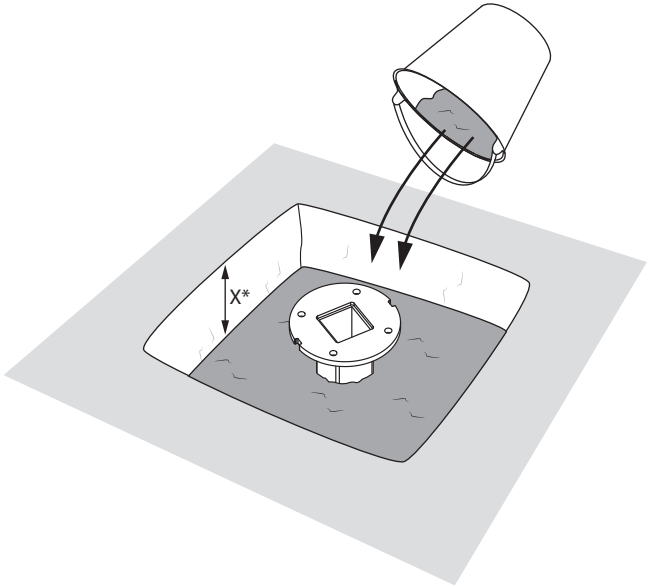

5

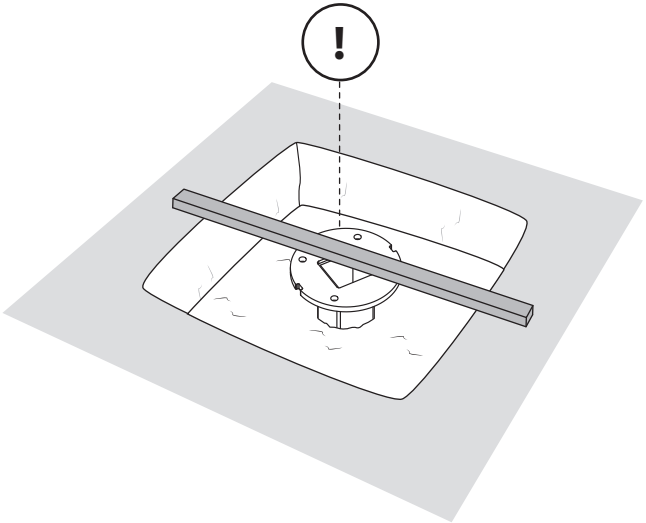

	GRASS	GRAVEL	H TILES
X*	10 cm / 4”	4 cm / 1 $^{1}/_{2}$”	= H

6

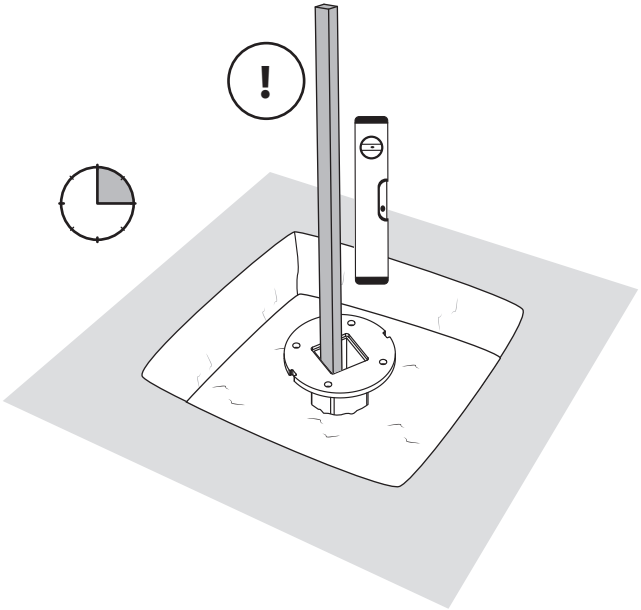

7

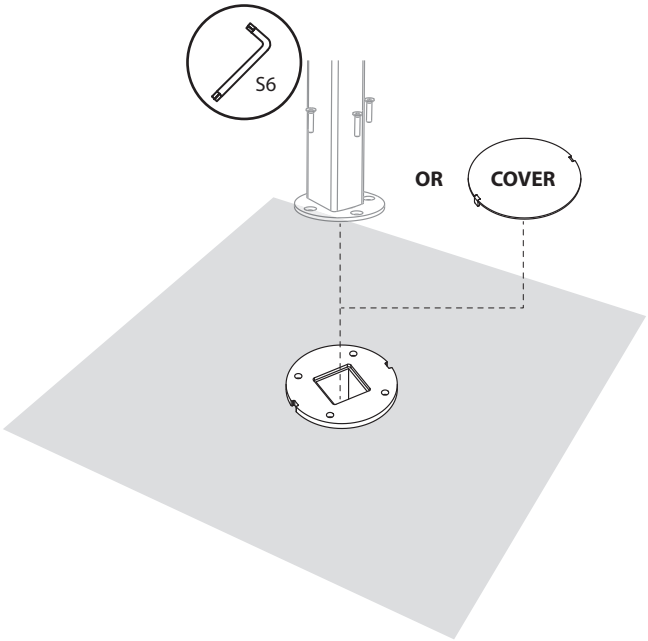

GROUND MOUNTING

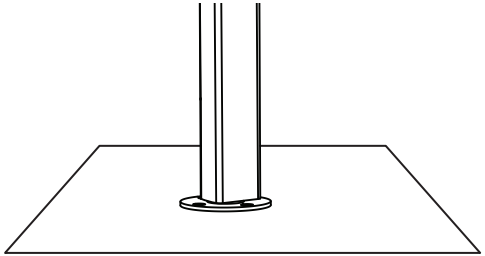

Not included - Niet inbegrepen - Pas inclus
Nicht inbegriffen - No incluido - Non incluso

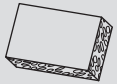 CONCRETE	WOOD	METAL
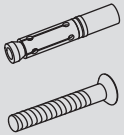	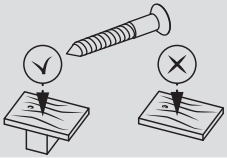	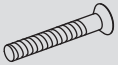
example: DIN 7991 M10	example: DIN 7997 Ø8 mm	example: DIN 7991 M10

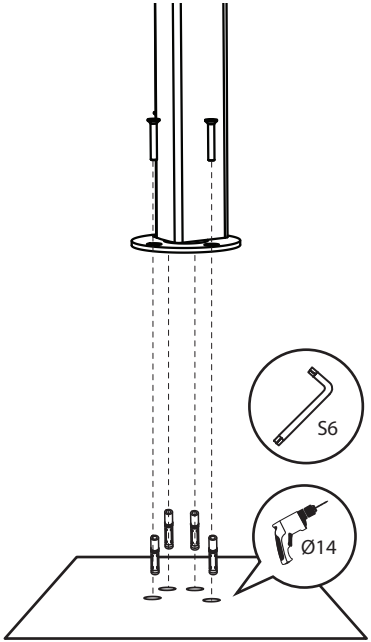

NANO UX INSTALLATION

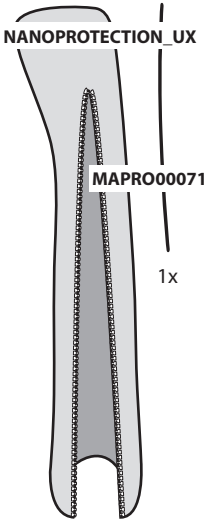

UMSTRAP0000000UX

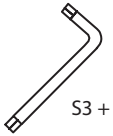

S3 + S6

MAKEY00030
MAKEY00060

4x (M8x100)

2x (M8)

2x (M8 x 60)

1x

2x 13

1

4x M10 x 90

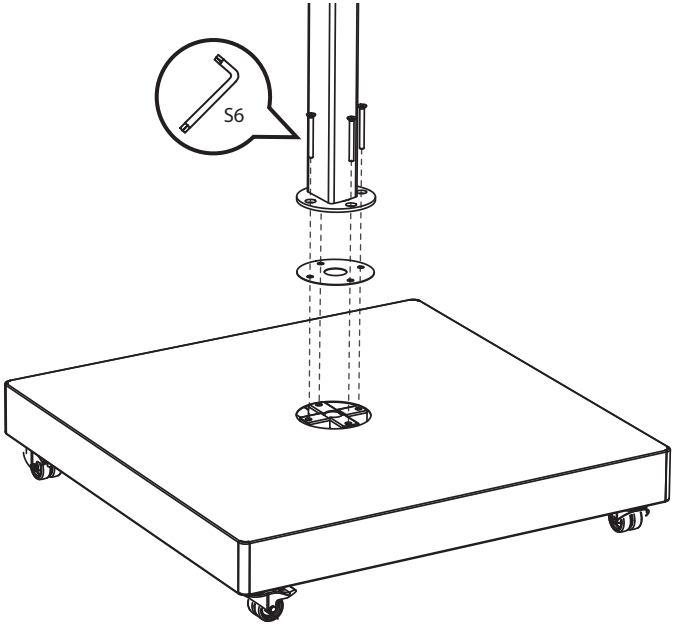

2

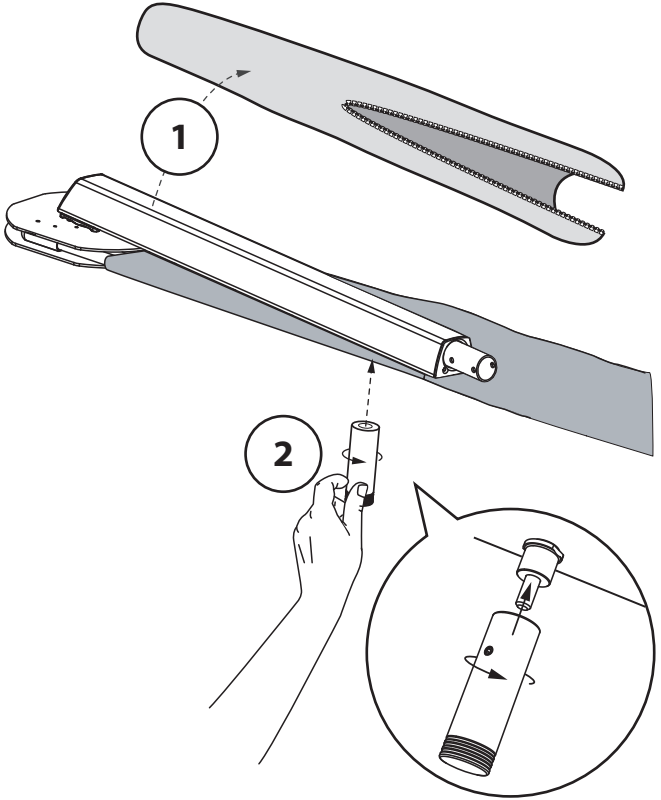

3

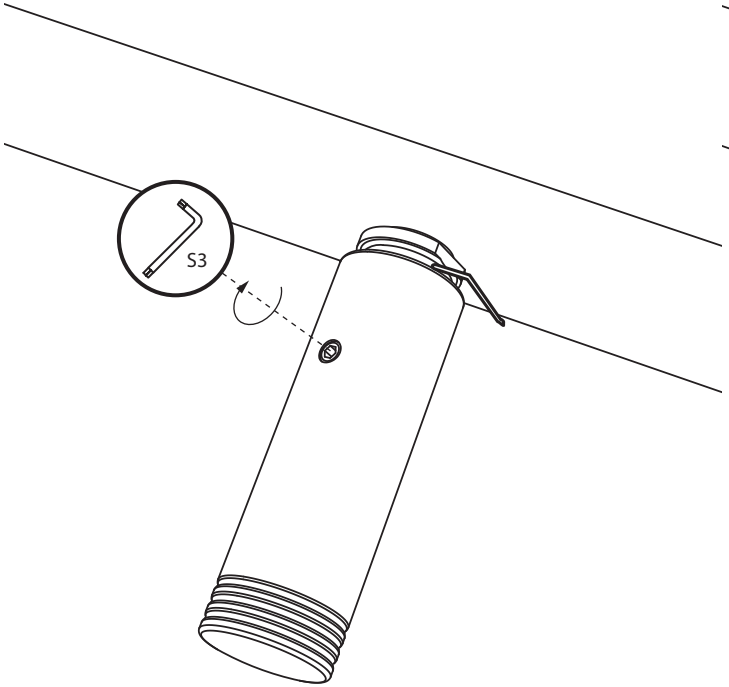

4

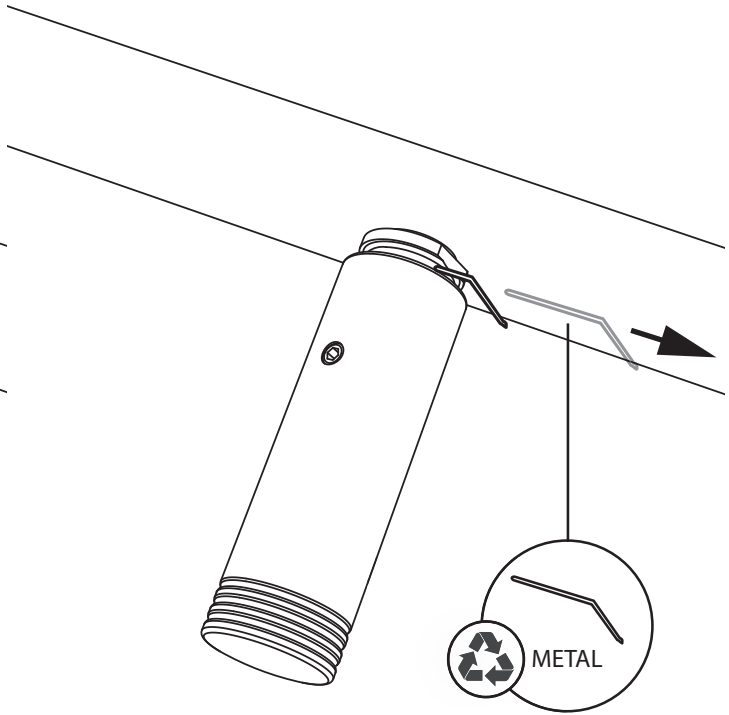

5

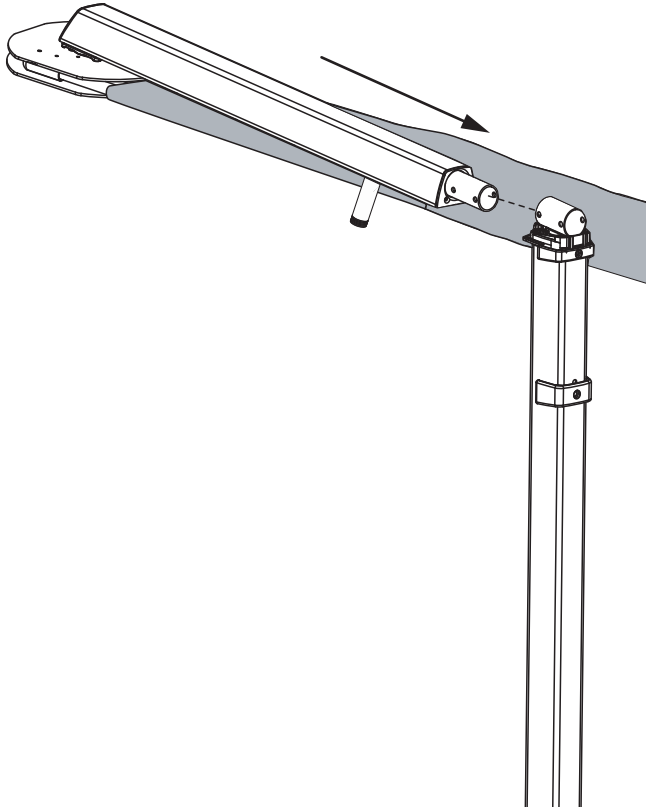

6

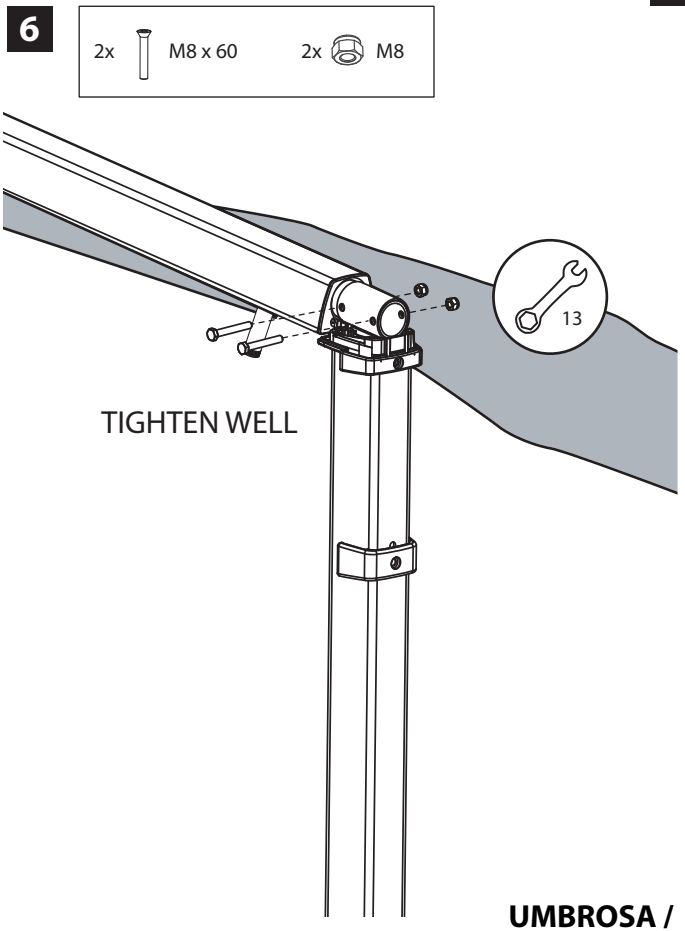

7

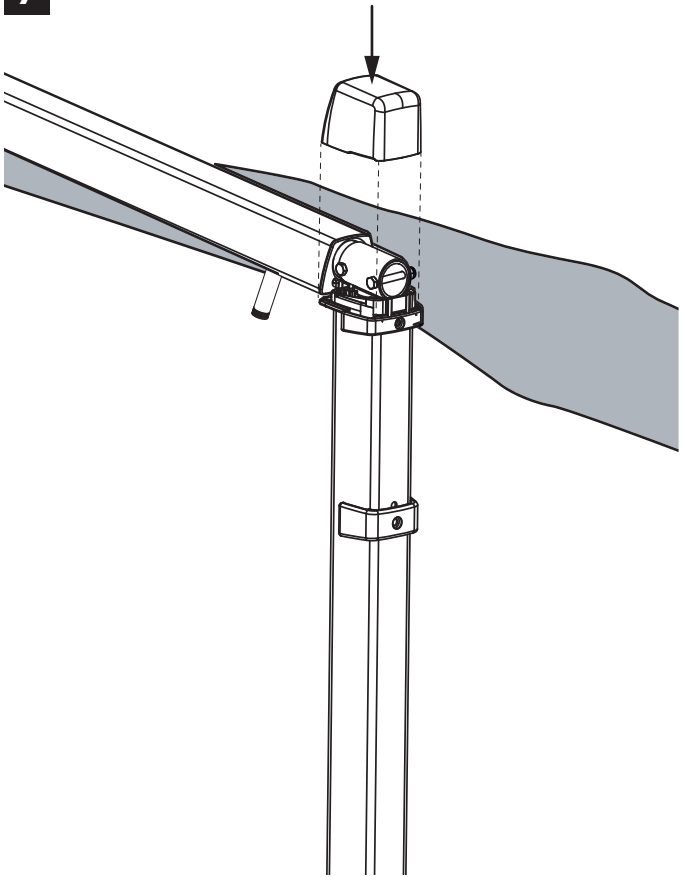

8

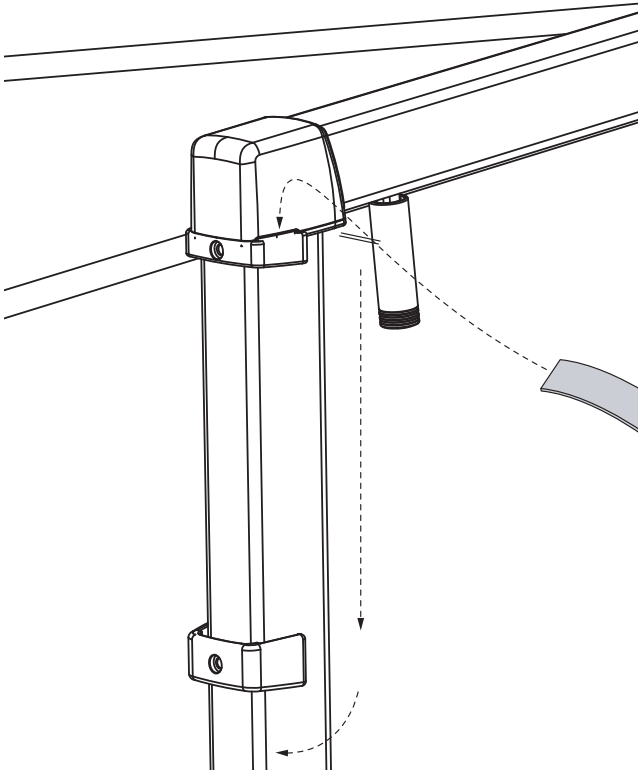

9

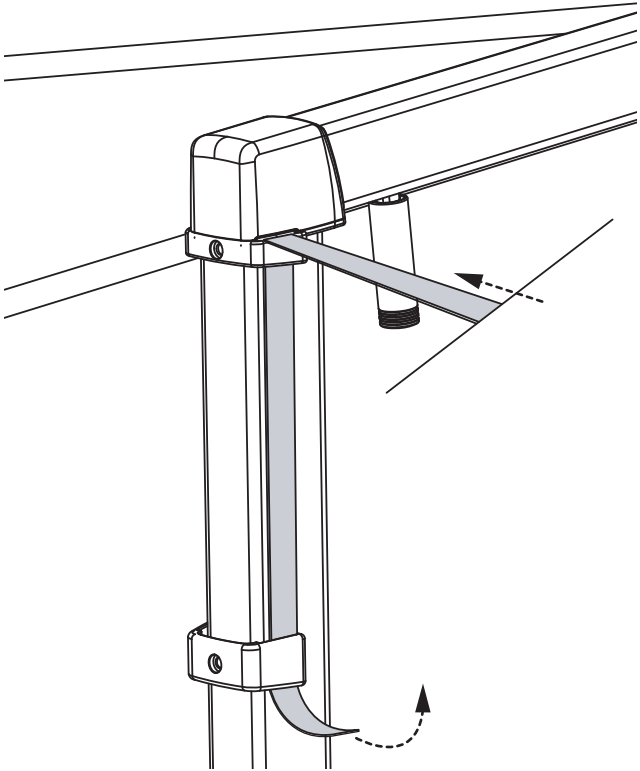

10

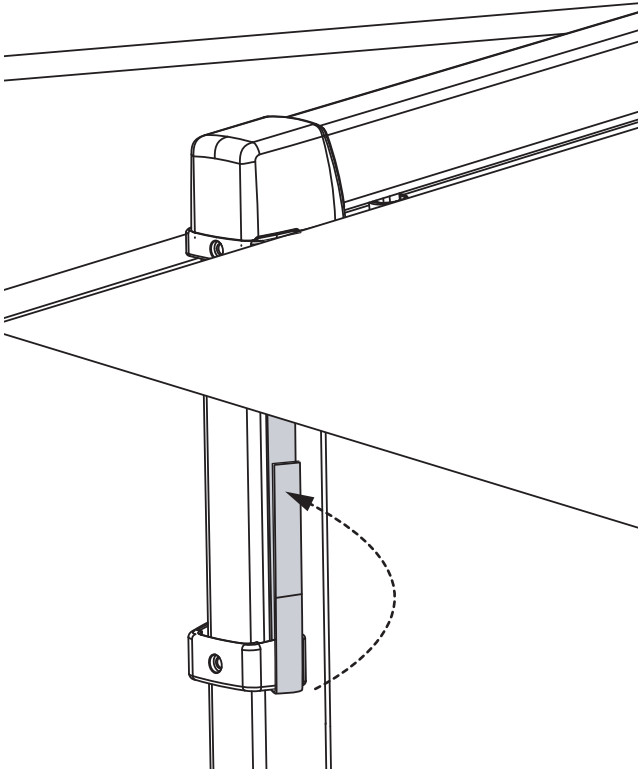

USER INSTRUCTIONS

ROTATE POLE

1

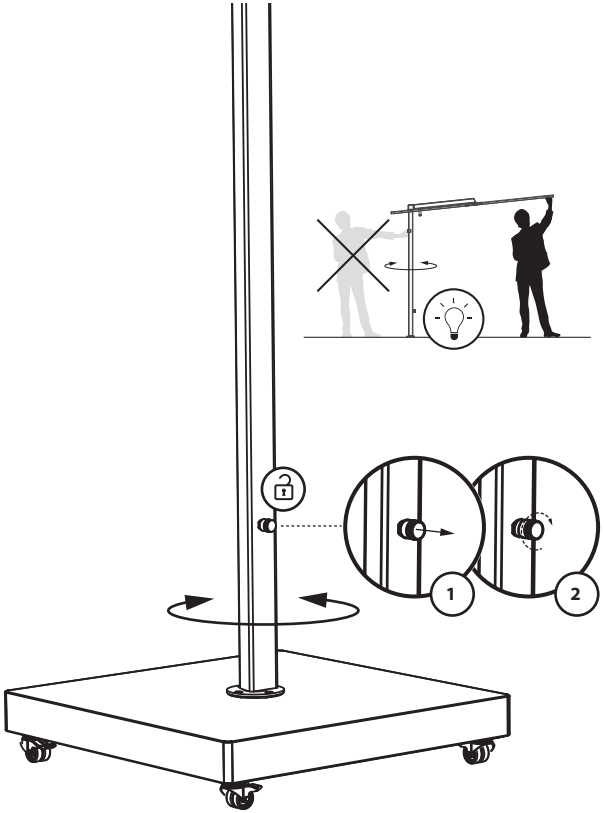

2

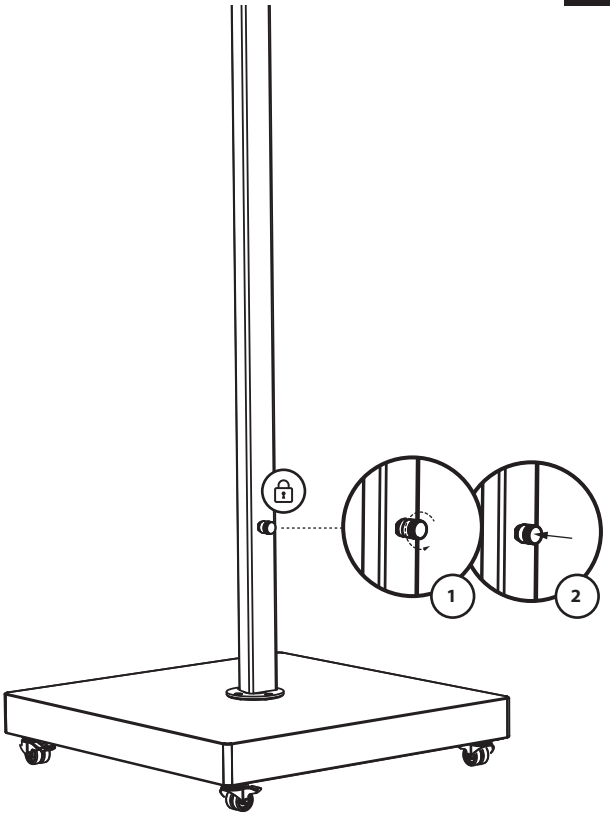

CAUTION: Do not use rotating function during winds. Doing so may cause damage to your umbrella.

OPEN AND CLOSE CANOPY

1

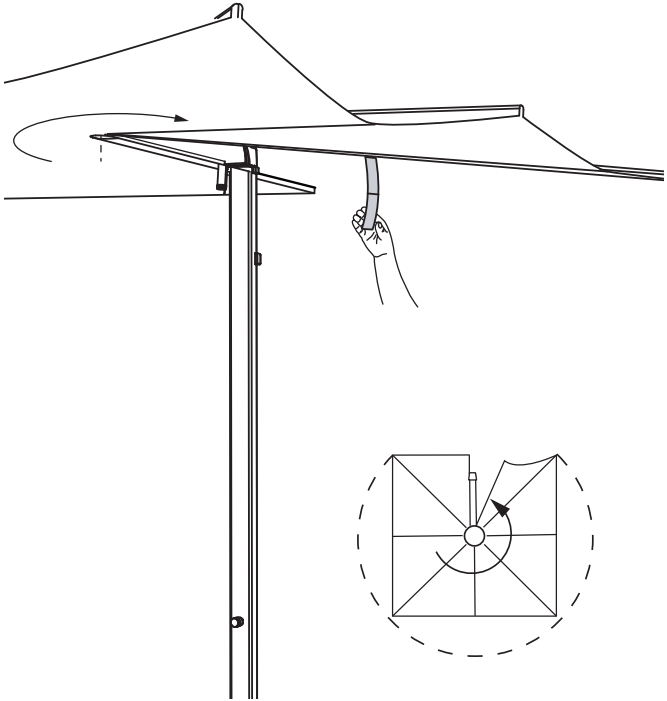

2

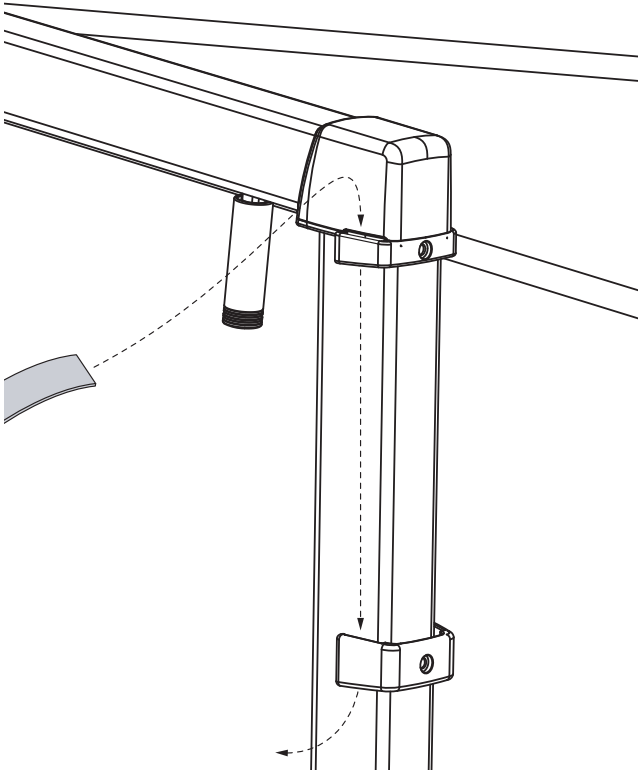

CAUTION: Never force the ribs.
If you experience any resistance, make sure all ribs are freed manually to facilitate opening.

3

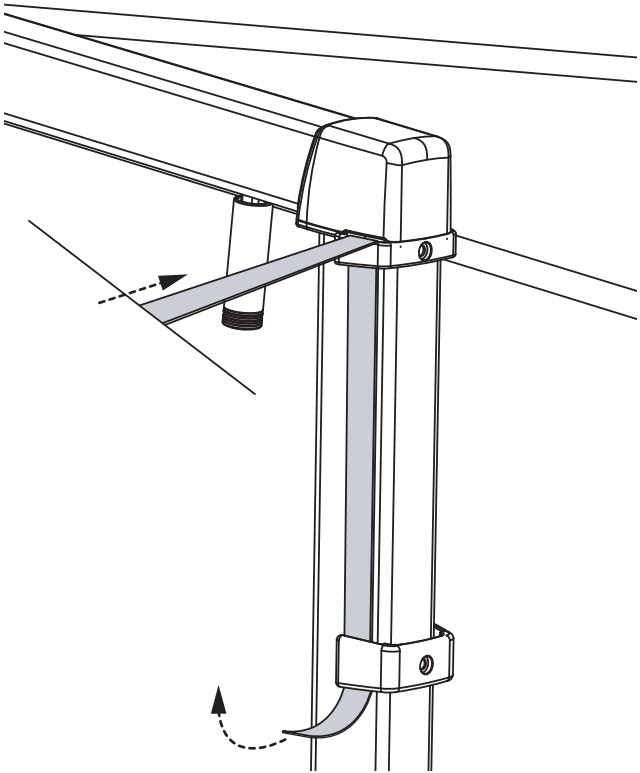

4

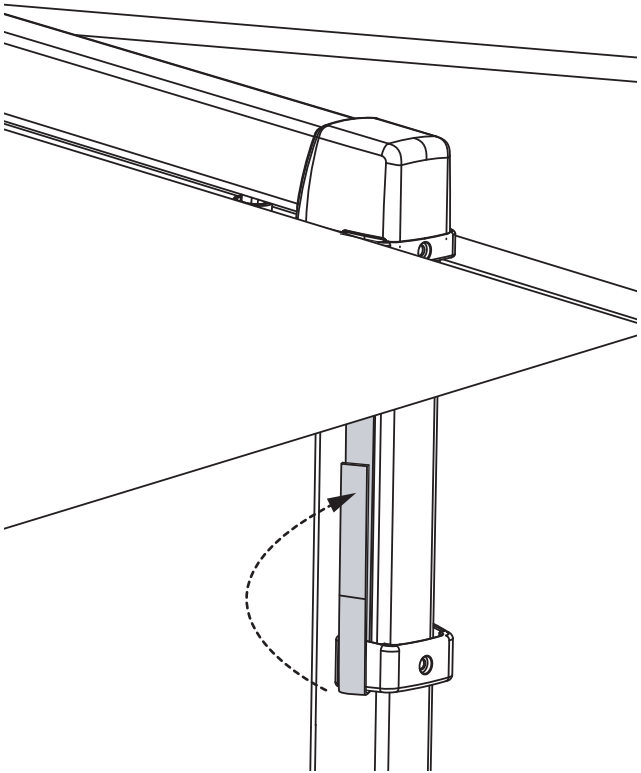

TILT CANOPY

1

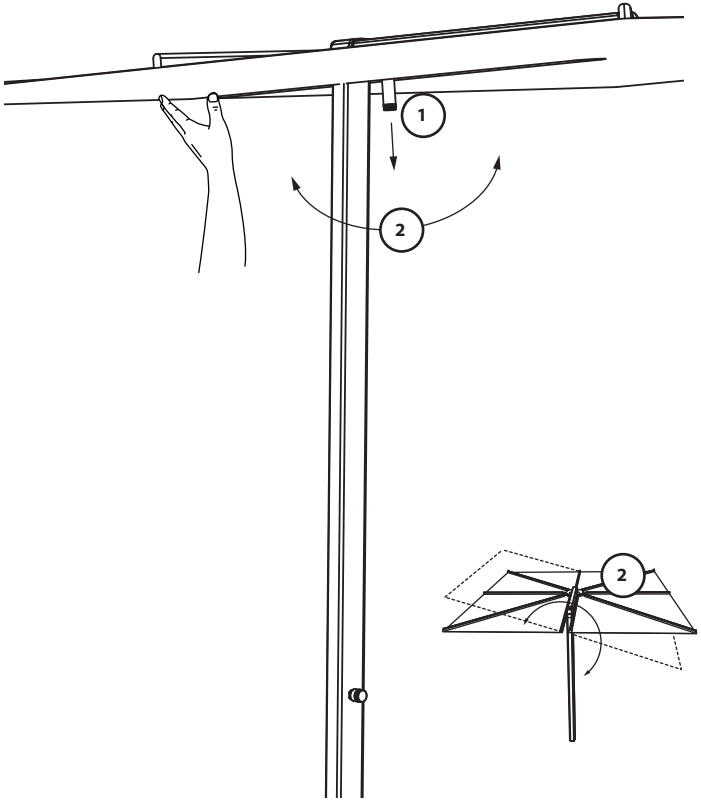

2

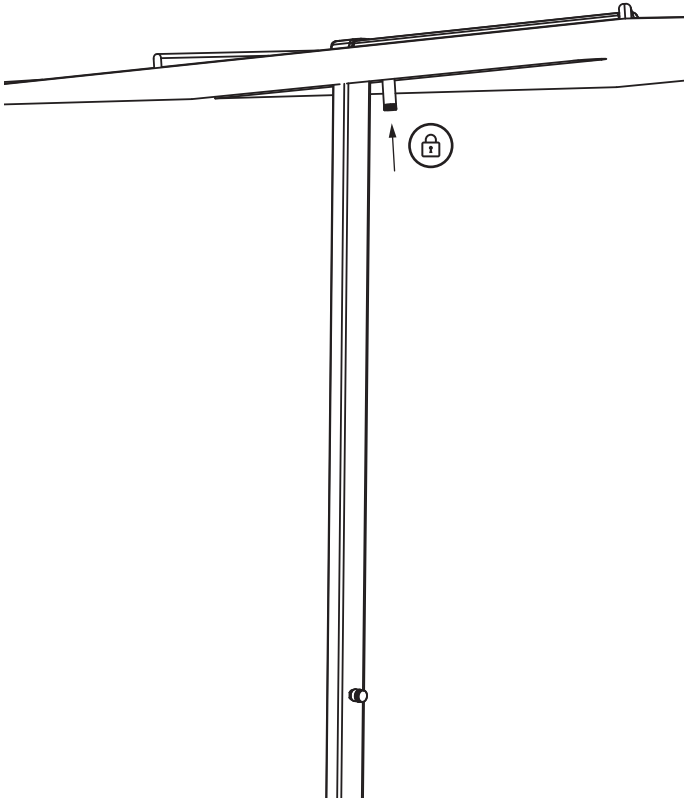

CAUTION: Do not use tilt function during winds.
Doing so may cause damage to your umbrella. Canopy can only be closed safely when it is not tilted.

TIPS

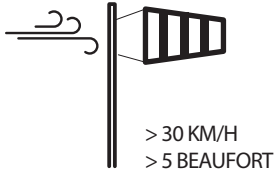

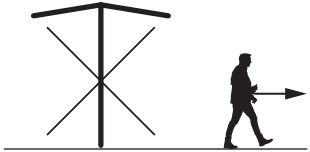

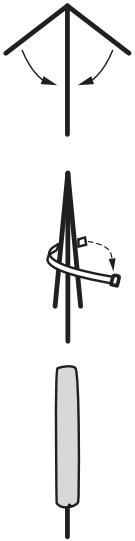

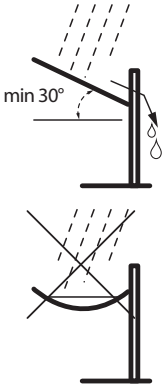

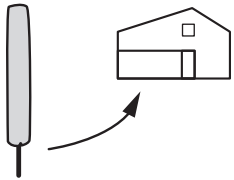

MAINTENANCE

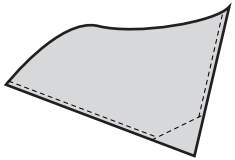

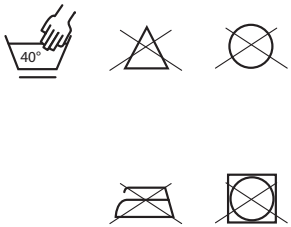

ENG	Maintenance instructions on website
NL	Onderhoudsinstructies op website
FR	Nettoyage et guide d'entretien sur le site web
DE	Pflegehinweise auf der Webseite
ES	Instrucciones de mantenimiento en el sitio web
IT	Istruzioni di mantenimento sul sito

MAINTENANCE

ENG In order to **prevent stainless steel from rusting,** it is necessary to treat it frequently and preventatively. Umbrosa recommends cleaning and protecting the surface regularly. Cleaning can easily be done using standard dishwashing detergents. Afterwards, a protection layer can be applied onto the dry surface with a silicon spray. In an aggressive environment (maritime climate, chlorine, acid rain, aggressive industrial or urban environment) we recommend to clean the surface more frequently. Rust can be removed using a a cloth and polishing paste. These kinds of products can be bought in do-it-yourself shops, but also in car specialty stores that sell several “stainless steel polishers”.

NL **Roestvast staal blijft enkel vrij van corrosie**, wanneer deze goed en preventief wordt behandeld. Umbrosa raadt bijgevolg aan om regelmatig het oppervlak te reinigen en beschermen. Reinigen kan eenvoudig met warm water met afwasmiddel zoals “Dreft”. Nadien brengt u op het droge oppervlakte een beschermlaag aan met bijvoorbeeld Silicone spray. In een agressieve omgeving (maritiem klimaat, chloor, zure regen, agressieve industriële of stedelijke omgeving), dient men de frequentie van dit preventief onderhoud op te drijven. Wanneer lichte roest zichtbaar is, dient deze te worden verwijderd met doek en speciale polierpasta. Dergelijke producten zijn te koop in Doe-het-Zelf zaken, alsook in autospeciaalzaken waar men verschillende “stainless steel polishers” verkoopt.

FR Pour **éviter que L’acier inoxydable corrode**, c’est nécessaire de traiter la surface régulièrement. Umbrosa conseille de nettoyer et protéger régulièrement la surface en utilisant l’eau chaude et un peu de détergent. Après, sur la surface sèche, vous pouvez appliquer une couche de protection avec, par exemple, un spray de Silicone. Surtout dans un environnement agressif (climat maritime, chlore, pluie acide, environnement industriel ou urbaine agressif) nous recommandons de nettoyer fréquemment la surface. Vous pouvez éliminer des éventuelles taches de rouille avec un chiffon et du cirage. Vous pouvez trouver ce type de produits dans des magasins bricolage, mais aussi dans des magasins spécialisés, ou on vend plusieurs “stainless steel polishers”.

DE **Edelstahl bleibt nur frei von Korrosion**, wenn dieser gut und Präventiv behandelt wird. Umbrosa empfiehlt regelmäßig die Oberfläche zu reinigen und zu schützen. Reinigung kann problemlos mit warmem Wasser mit Seife. Danach bearbeiten Sie die trockene Oberfläche mit einer Schutzschicht z.B. Silikonspray. In einem aggressiven Umfeld (Seeklima, Chlor, saurer Regen, aggressive Industrie- oder städtischen Umwelt) sollte mann diese Behandlung häufig machen. Sichtbaren Rost sollte mit Tuch und spezielle Polierwerkzeuge Paste entfernt werden. Solche Produkte findet man in Baumärkten sowie in Auto Läden wo man verschiedene "Edelstahl Polierer verkauft".

ES **Acero inoxidable sólo permanece libre de corrosión**, cuando esta bien y se trata como una medida preventiva. Umbrosa recomienda de limpiar regularmente la superficie para y proteger. Limpieza puede fácilmente con agua tibia con jabón del plato. Luego, lleva sobre la superficie seca con una capa protectora para por ejemplo spray de silicona. En ambientes agresivos (clima marítimo, cloro, lluvia ácida, agresivo ambiente urbano o industrial), la frecuencia de este mantenimiento preventivo para arriba. Cuando el moho visible, se debe retirar con paño y pasta de pulir especial. Estos productos se venden en ferreterías, así como en tiendas de coches donde uno diferentes vende ’’pulidores de acero inoxidable".

IT Per **prevenire l’arruginirsi dell’acciao inox**, è necessario curarlo frequentemente e preventivamente. Umbrosa consiglia di pulire e proteggere frequentemente la superficie. E’ possibile pulire l’acciaio inox con aqua calda e detergente. Dopo aver pulito la superficie, la potete proteggere applicando sulla superficie asciutta uno strato protettivo con, per esempio, lo spray al silicone. In un ambiente aggressivo (clima marittimo, cloro, pioggia acida, ambiente aggressivo industriale o urbano) consigliamo di pulire la superficie più spesso. E’ possibile rimuovere possibili macchie di ruggine con uno straccio e un po’ di lucidante. Questi prodotti sono disponibili in negozi fai da te, ma anche in negozi specializzati (come quelli che vendono i prodotti per pulire le macchine) che vendono vari “stainless steel polishers”.

WARRANTY

KEEP THIS AVAILABLE

1 PROOF OF PURCHASE / AANKOOPBEWIJS / PREUVE D'ACHAT / KAUFBELEG / JUSTIFICANTE DE COMPRA / PROVA D'ACQUISTO

2 SERIAL NUMBER / SERIENUMMER / NUMÉRO DE SÉRIE / SERIENNUMMER / NÚMERO DE SERIE / NUMERO DI SERIE

ENG Warranty conditions on website
NL Garantievoorwaarden op website
FR Conditions de garantie sur le site Web
DE Garantiebedingungen auf der Webseite
ES Condiciones de garantía en el sitio web
IT Condizioni di garanzia sul sito

SPARE PARTS

NANO UX

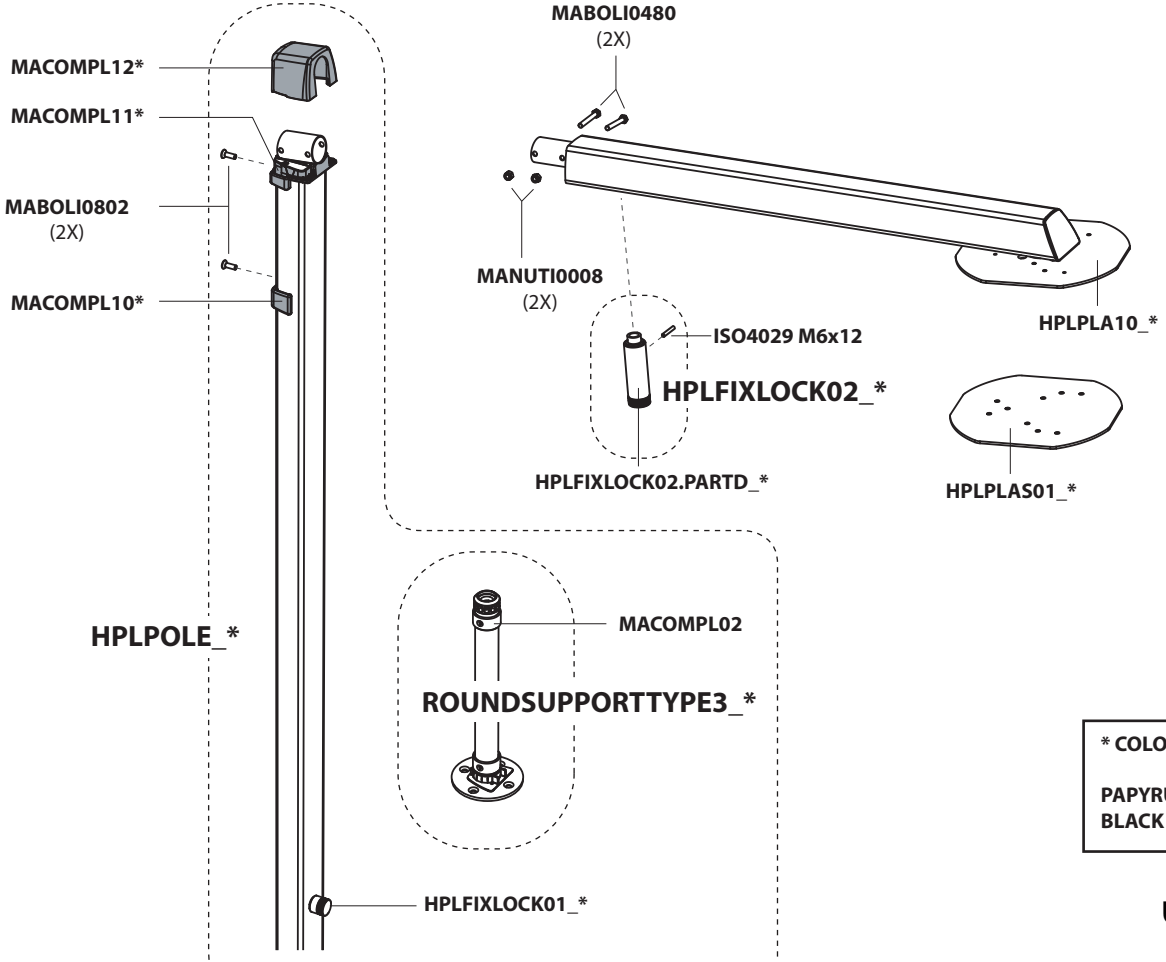

* COLOR CODES	
PAPYRUS WHITE	_9018
BLACK	_9005

SPARE PARTS

NANO UX

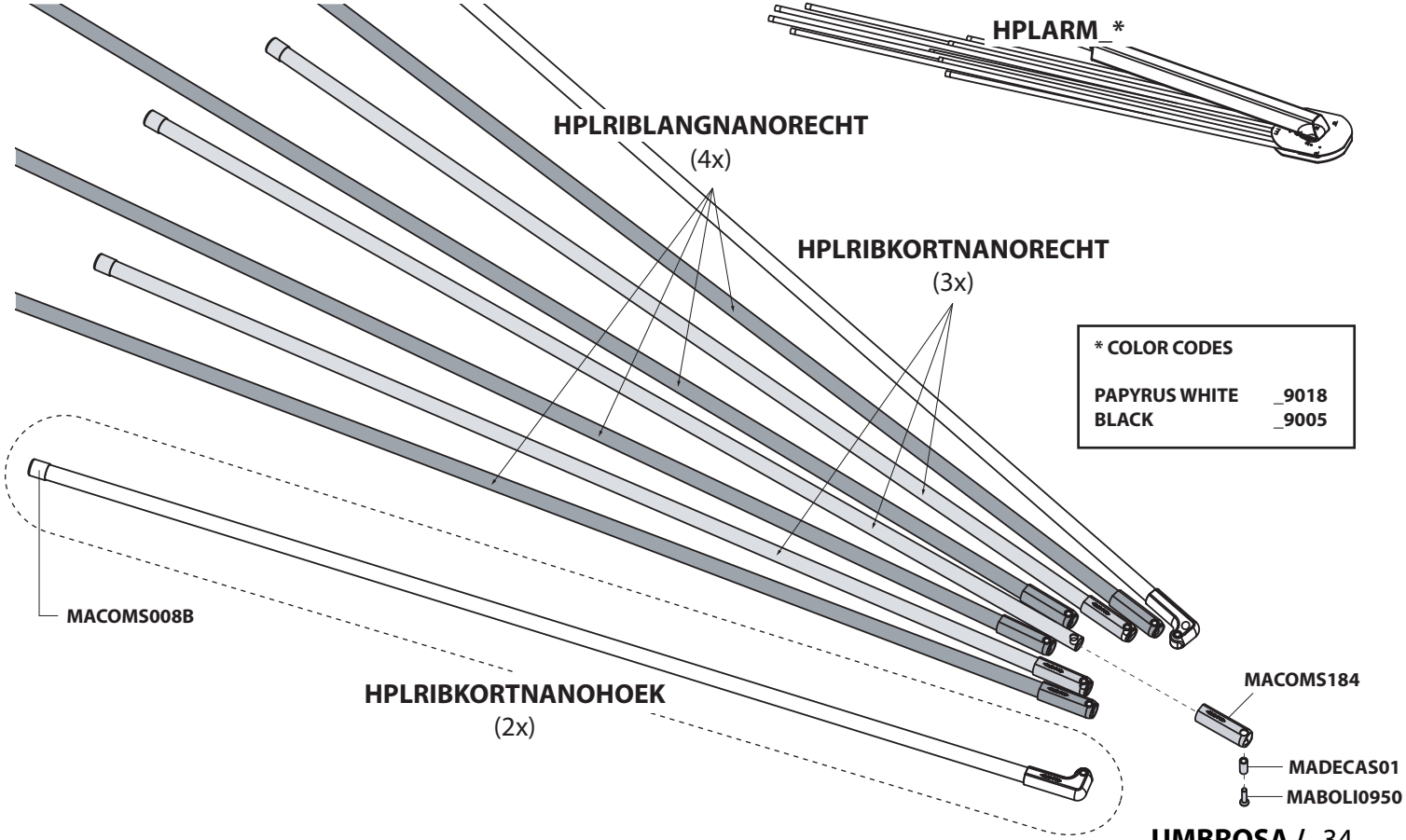

SPARE PARTS

MEDIUM TILE BASE

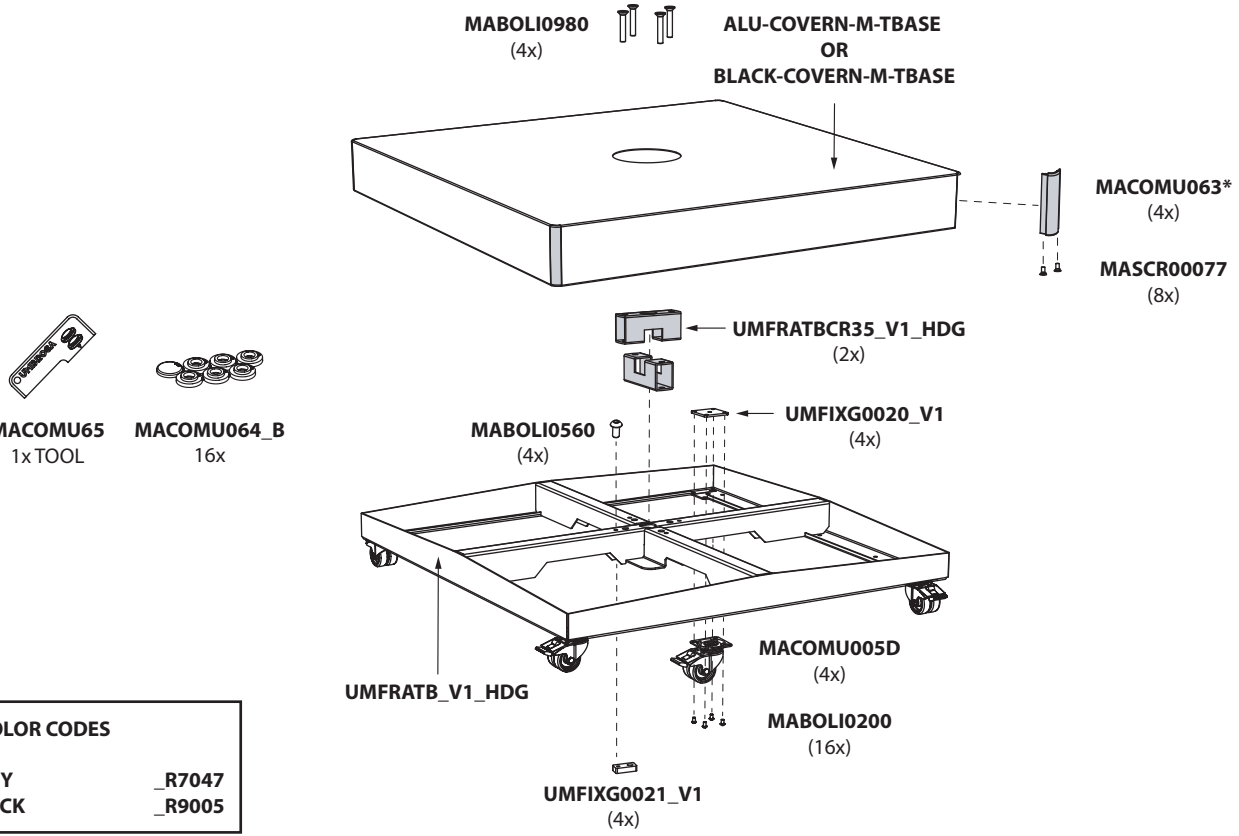

* COLOR CODES	
GREY	_R7047
BLACK	_R9005

UMBROSA

UNIQUE SHADE DESIGN

Umbrosa
Beversesteenweg 565 B, 8800 Roeselare, Belgium.
T: +32 51 30.22.60 | F: +32 51 30.22.62 | E: info@umbrosa.com | www.umbrosa.com

Umbrosa Inc
530 7th Avenue, Suite 902, New York, NY 10018
T: (855) 285-6595 | E: info@umbrosa.com | www.umbrosa.com

The content of this document, in particular the mentioned models, is protected by copyrights and/or design rights. The present document and its content is communicated to you for information purposes only. Any partial or total reproduction or any other use without our prior written permission is strictly prohibited. This technical sheet remains subject to possible changes. Of course we do our best to eliminate all mistakes, but Umbrosa is not responsible for the errors in the documentation of products. All measurements are approximate and are provided for informational purposes only.

VERSION 20230514